Automotive Control Systems

-Past, present, and future-

Prof. Dr.-Ing.Rolf Isermann

Technische Universität Darmstadt
Institute of Automatic Control and Mechatronics
Darmstadt, Germany

Automotive Control Systems

- Introduction
- Mechatronic components and driver assistance systems
- Control structures for automobiles
- Modelling and parameter estimation of vehicle dynamics
- From driver assistance systems to automatic driving
- Collision avoidance systems
- Fault tolerant issues
- Outlook

Some general drivers for the development of automobiles

1. Shortage of fossil energy and raw material resources:

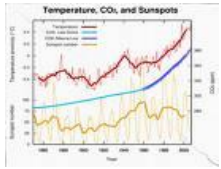

- Increasing energy and raw material prices
- Increased use of regenerative energy sources (wind, biofuel, solar), and storage

Some general drivers for the development of automobiles

1. Shortage of fossil energy and raw material resources:

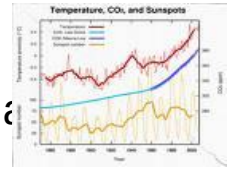

- Increasing energy and raw material prices
- Increased use of regenerative energy sources (wind, biofuel, solar), a

2. Increasing transportation and mobility

- More traffic (ground, air, sea)
- Energy/time efficient mobility concepts

Some general drivers for the development of automobiles

1. Shortage of fossil energy and raw material resources:

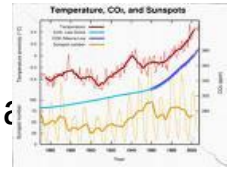

- Increasing energy and raw material prices
- Increased use of regenerative energy sources (wind, biofuel, solar), a

2. Increasing transportation and mobility

- More traffic (ground, air, sea)
- Energy/time efficient mobility concepts

3. Improvement of safety for automobiles

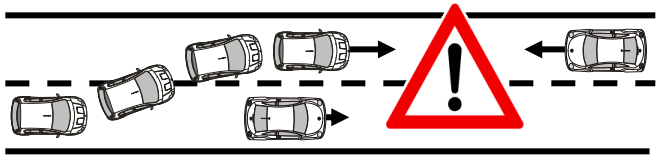

- Passive safety
- Active safety

Some general drivers for the development of automobiles

1. Shortage of fossil energy and raw material resources:

- Increasing energy and raw material prices
- Increased use of regenerative energy sources (wind, biofuel, solar), and storag

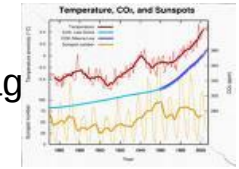

2. Increasing transportation and mobility

- More traffic (ground, air, sea)
- Energy/time efficient mobility concepts

3. Improvement of safety for automobiles

- Passive safety
- Active safety

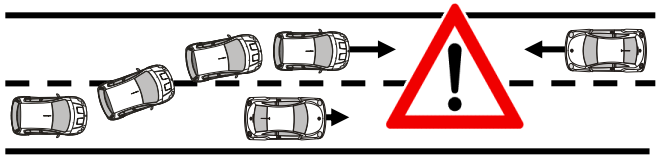

4. Increasing electrification and electronification

- Electronic sensors, electrical actuators, electronic control units
- Integration to mechatronic components
- Power trains with combustion engines and/or electrical motors

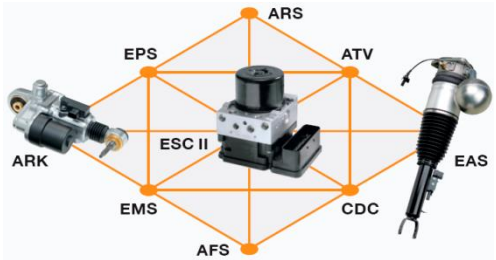

Automotive Control Systems

- Introduction
- Mechatronic components and driver assistance systems
- Control structures for automobiles
- Modelling and parameter estimation of vehicle dynamics
- From driver assistance systems to automatic driving
- Collision avoidance systems
- Fault tolerant issues
- Outlook

Electrical system of a passenger car in1958

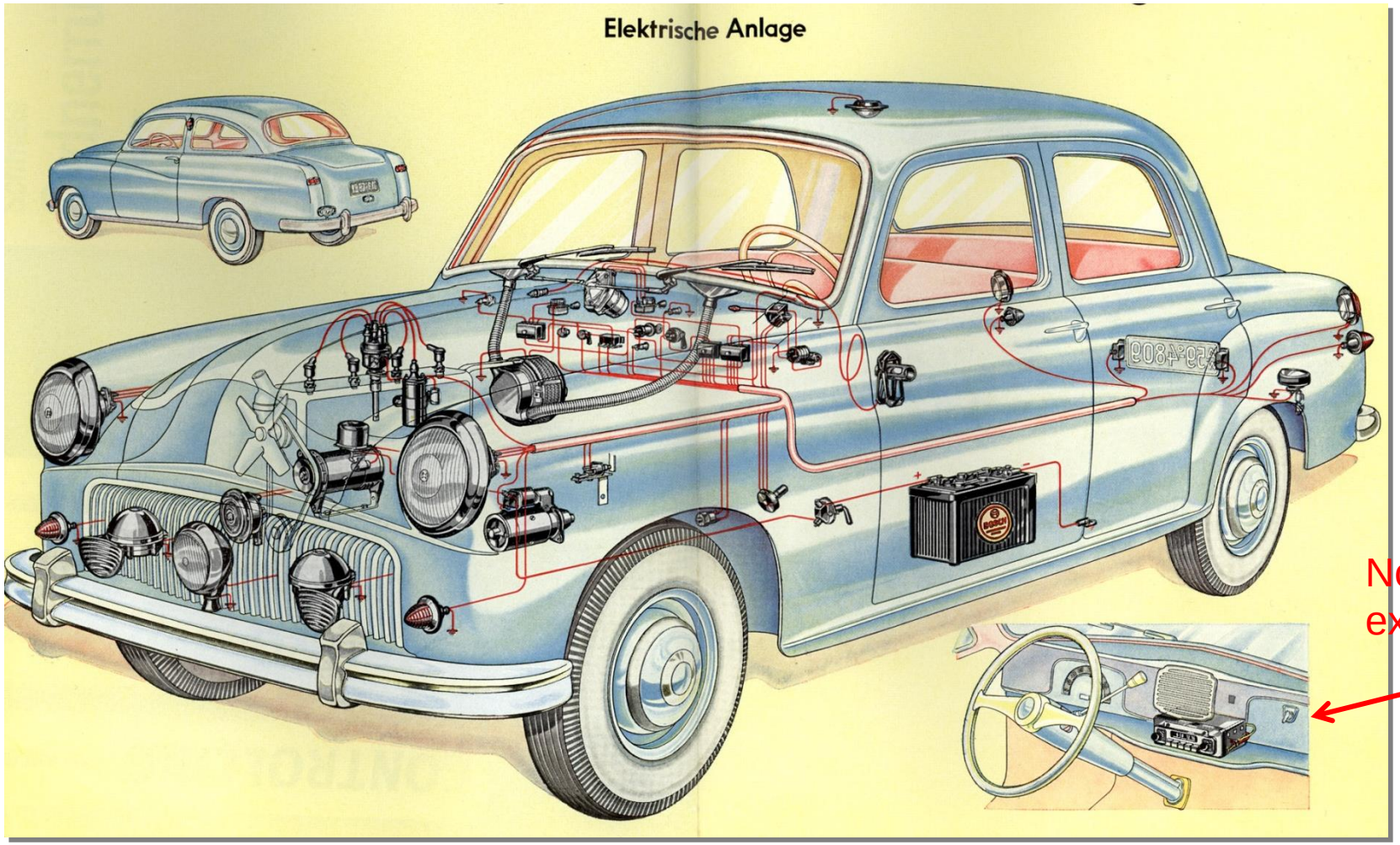

- Alternator
- Battery
- Starter
- Ignition
- Lights
- Blinker
- Horn

....

No electronics, except the radio

Source: Rainer Kallenbach, Bosch 2010: DSC Conference. Cambridge (historical Bosch archive)

Mechatronic components and driver-assistance systems

Sensors

wheel speed

pedal position

yaw rate

lateral & longitudinal acceleration

susp. deflection

brake pressure

steering angle

steering torque

ultra sonic

Radar system

video camera system

stereo camera system

Actuators

hydraulic pump

magnetic switching valves

electronic throttle valve

electro-pneumatic brake booster

magnetic proportional valves

semi-active shock absorbers

electric power steering

rear axle steering

torque vectoring

electro-hydraulic or

electromotoric stabiliser

Sensors

wheel speed

pedal position

yaw rate

lateral & longitudinal acceleration

susp. deflection

brake pressure

steering angle

steering torque

ultra sonic

Radar system

video camera

system

stereo camera

system

Mechatronic components and driver-assistance systems

→Highly automated driving (20xxx)

→Anti-collision-avoidance (20xx)

Antilock brakes (ABS, 1979)

Parking assistance (2003)

Traction control (TCS, 1986)

Dynamic drive control (DDC, 2003)

Electronic stability program (ESP, 1995)

Active front steering (AFS, 2003)

Brake assist (BA, 1996)

Continuous damping control (CDC, 2002)

Electrical power steering (EPS, 1996)

Electro-hydraulic brake (EHB, 2001)

Electronic air suspension control (EAS, 1998)

Active body control (ABC, 1999)

Adaptive cruise control (ACC, 1999)

Actuators

hydraulic pump

magnetic switching valves

electronic throttle valve

electro-pneumatic brake booster

magnetic proportional valves

semi-active shock absorbers

electromotoric actuator for active front steering

electro-hydraulic or electromotoric stabiliser

From hydraulic brake systems to mechatronic brake systems

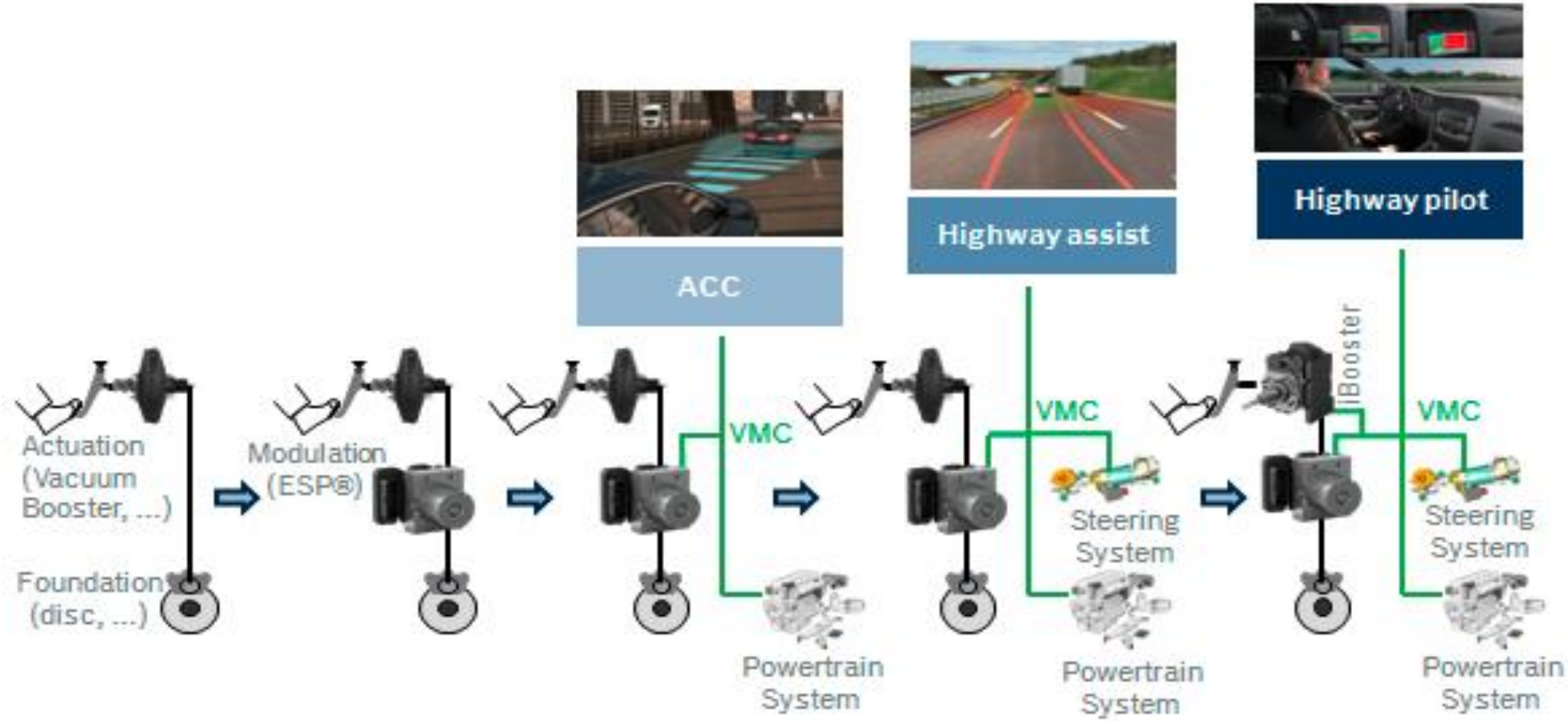

Conventional hydraulic brake with vacuum booster

Electronic modulation ABS, ASC

Deceleration, acceleration with ACC

ACC plus steering system, expanded VMC

Electric booster, redundanccy for steering

Source: Alexander Haeussler; Bosch; Automated Driving …, ATZ Conf. ChassisTec ,Munic h 2015

VMC: Vehicle Motion Control

Brake-by-wire systems

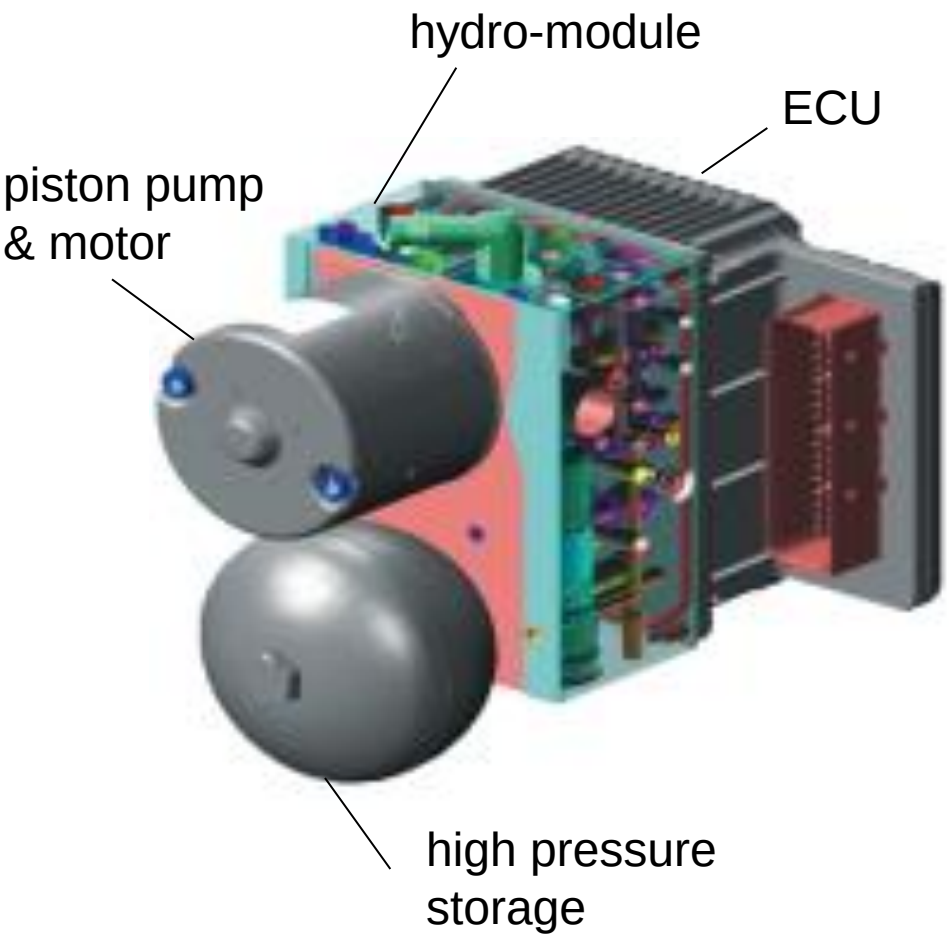

Electrohydraulic brake control (EHB), Bosch;
(2001, serial production until ~ 2010)

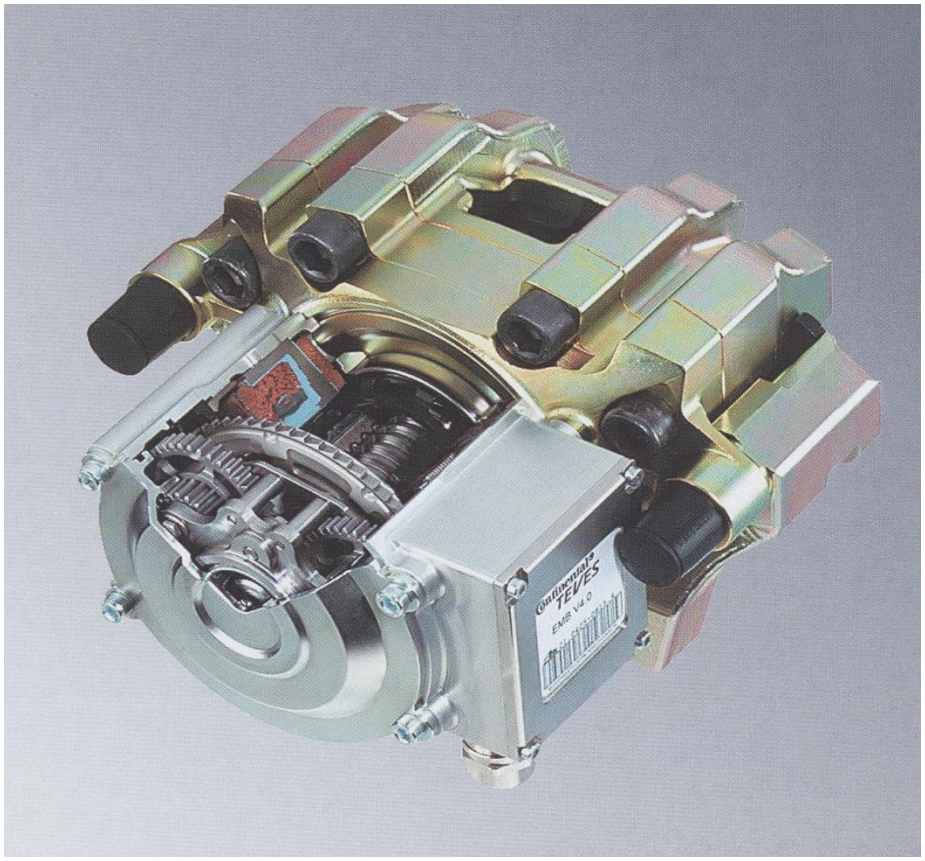

Electromechanical brake (EMB),
Continental Teves (2000), prototype

Brake System Software Functions

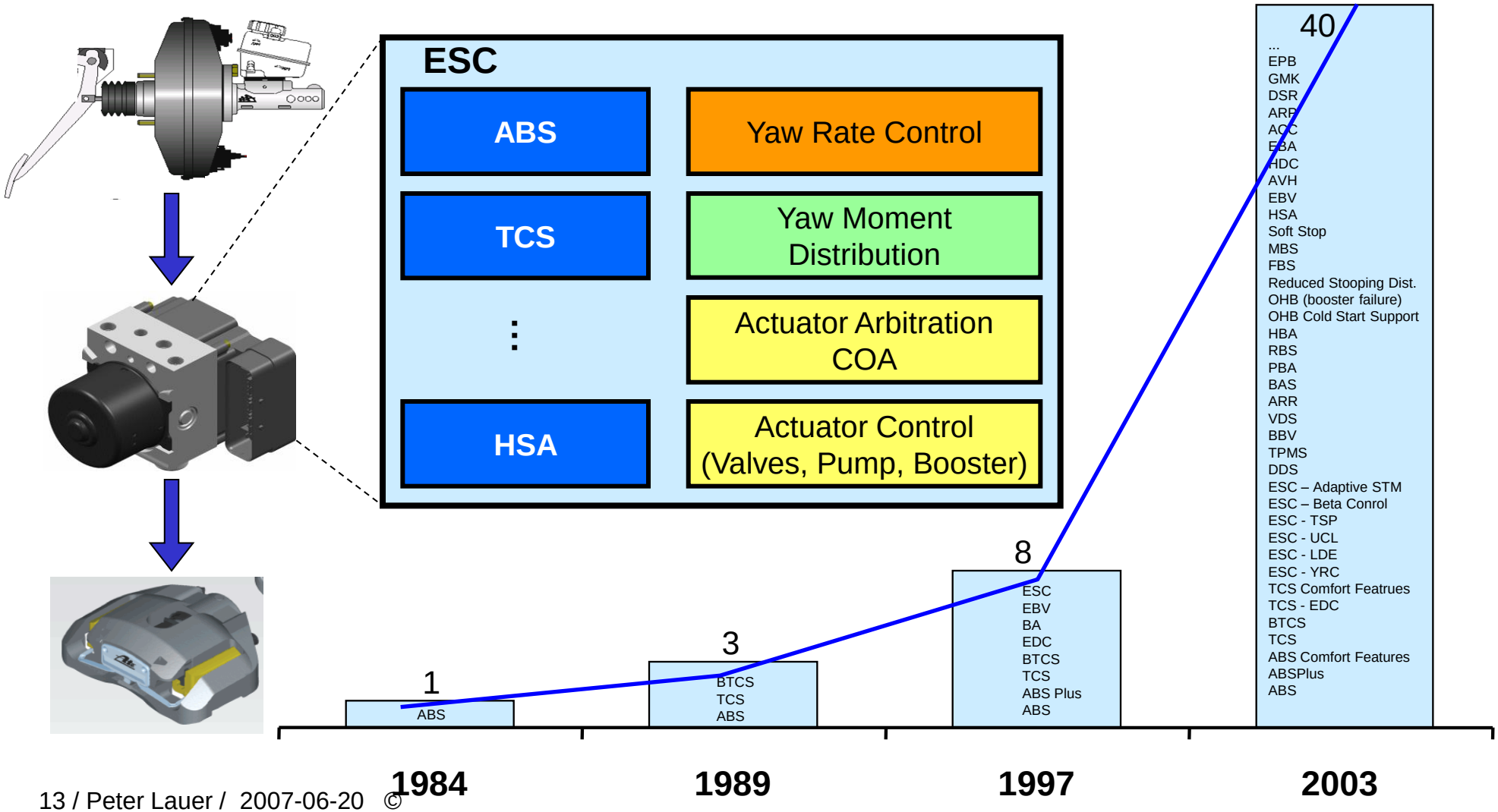

Hydraulic Power Steering (HPS)

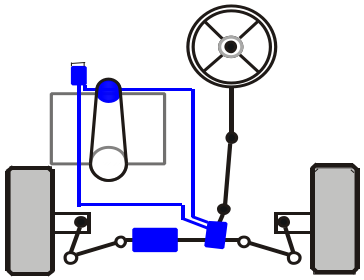

Electrical Power Steering (EPS)

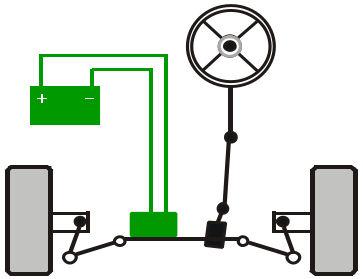

Electrical Power Assisted Steering (HPS + EPS)

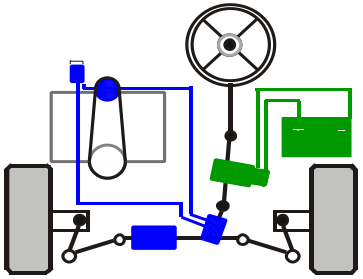

Active Front Steering (AFS)

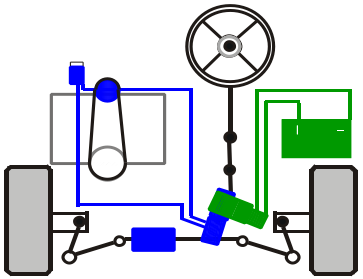

Steer-by-Wire (SbW)

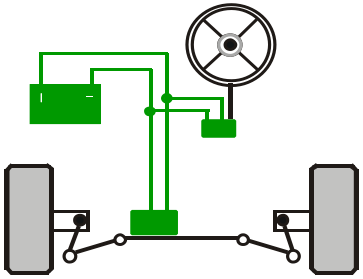

Automotive Control Systems

- Introduction
- Mechatronic components and driver assistance systems
- Control structures for automobiles
- Modelling and parameter estimation of vehicle dynamics
- From driver assistance systems to automatic driving
- Collision avoidance systems
- Fault tolerant issues
- Outlook

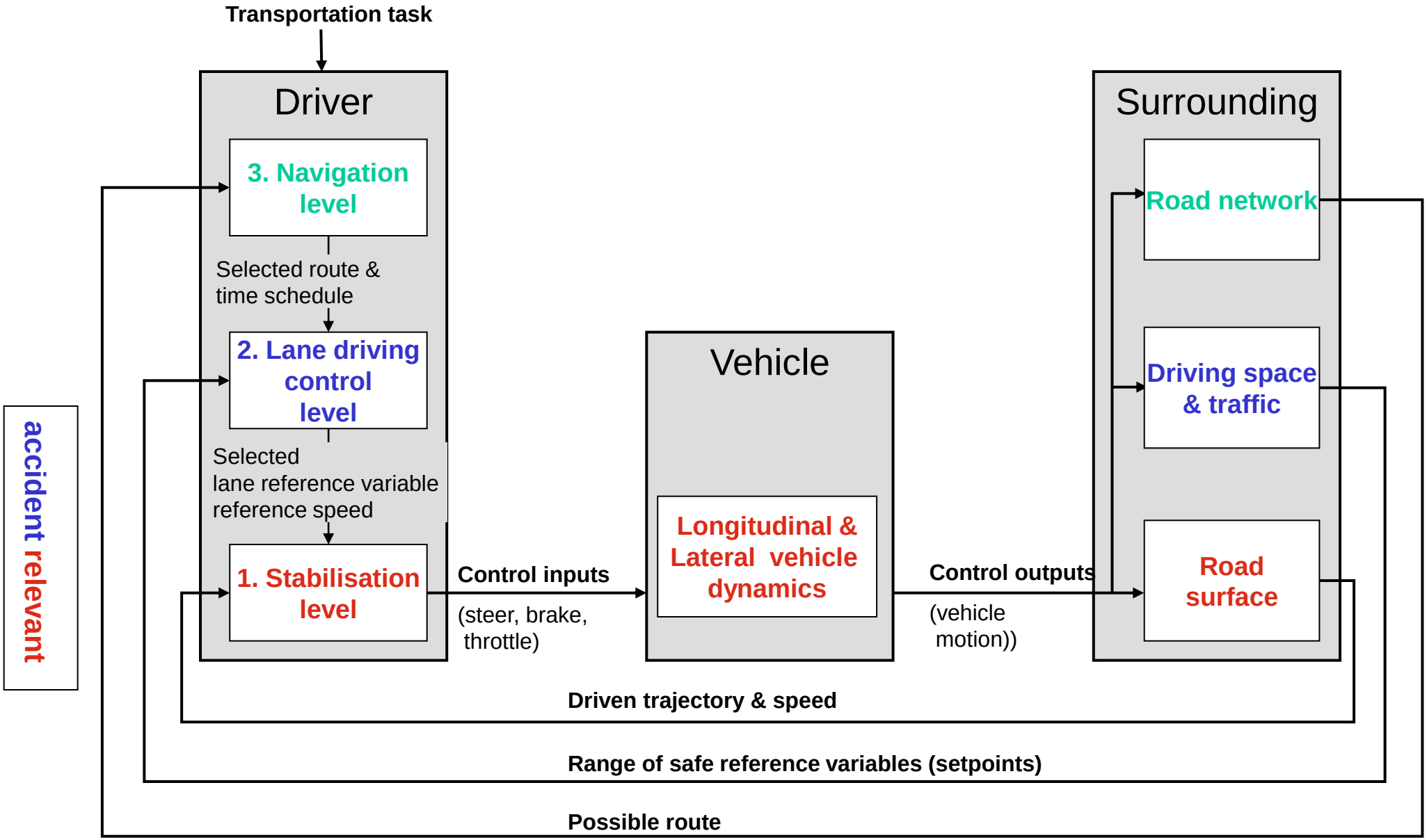

3 - level vehicle guidance (basic, driver control), Donges 1982

Signal flow: manual driving, some driver assistance systems → „peaceful coexistence“

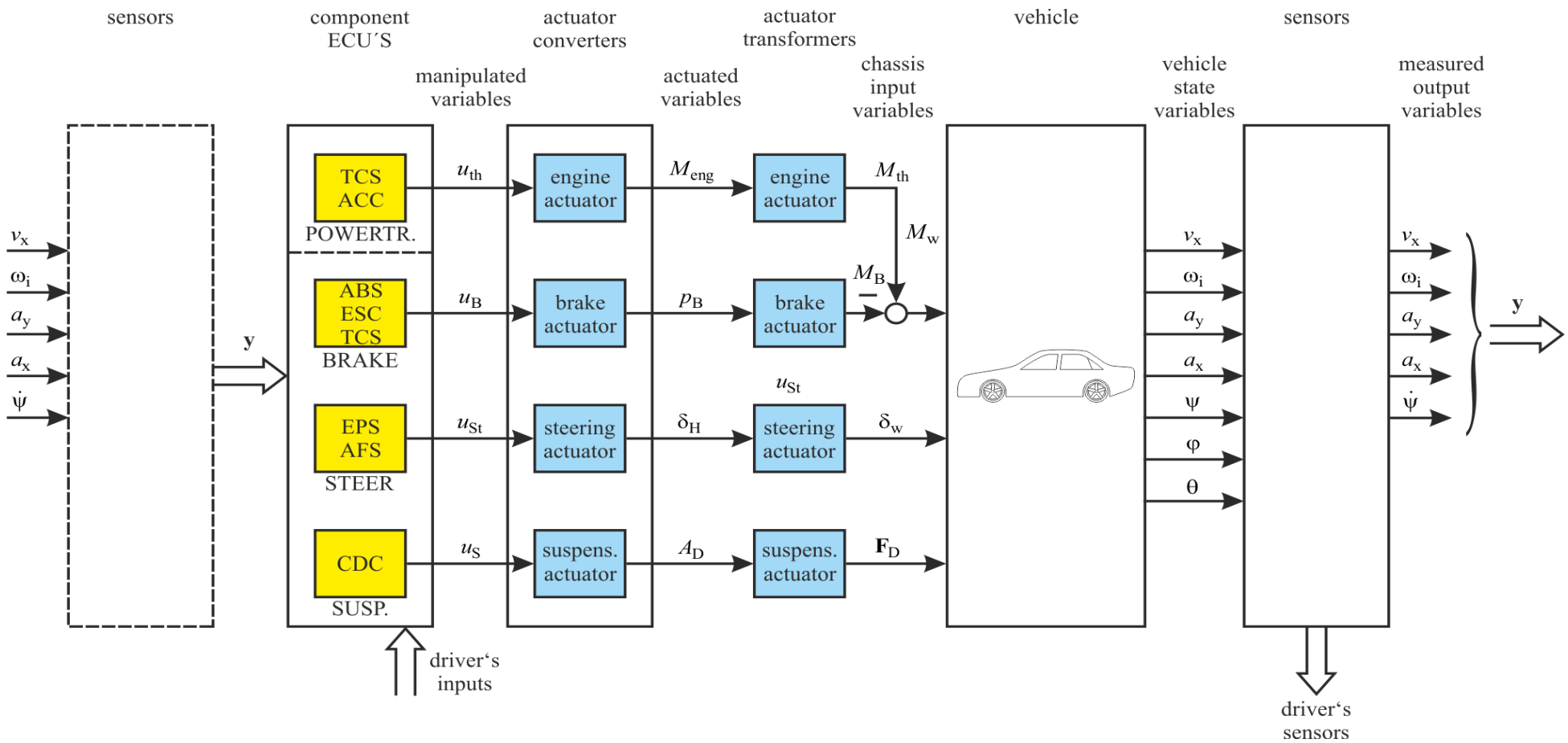

Modern chassis with actuators and advanced driver assistance systems

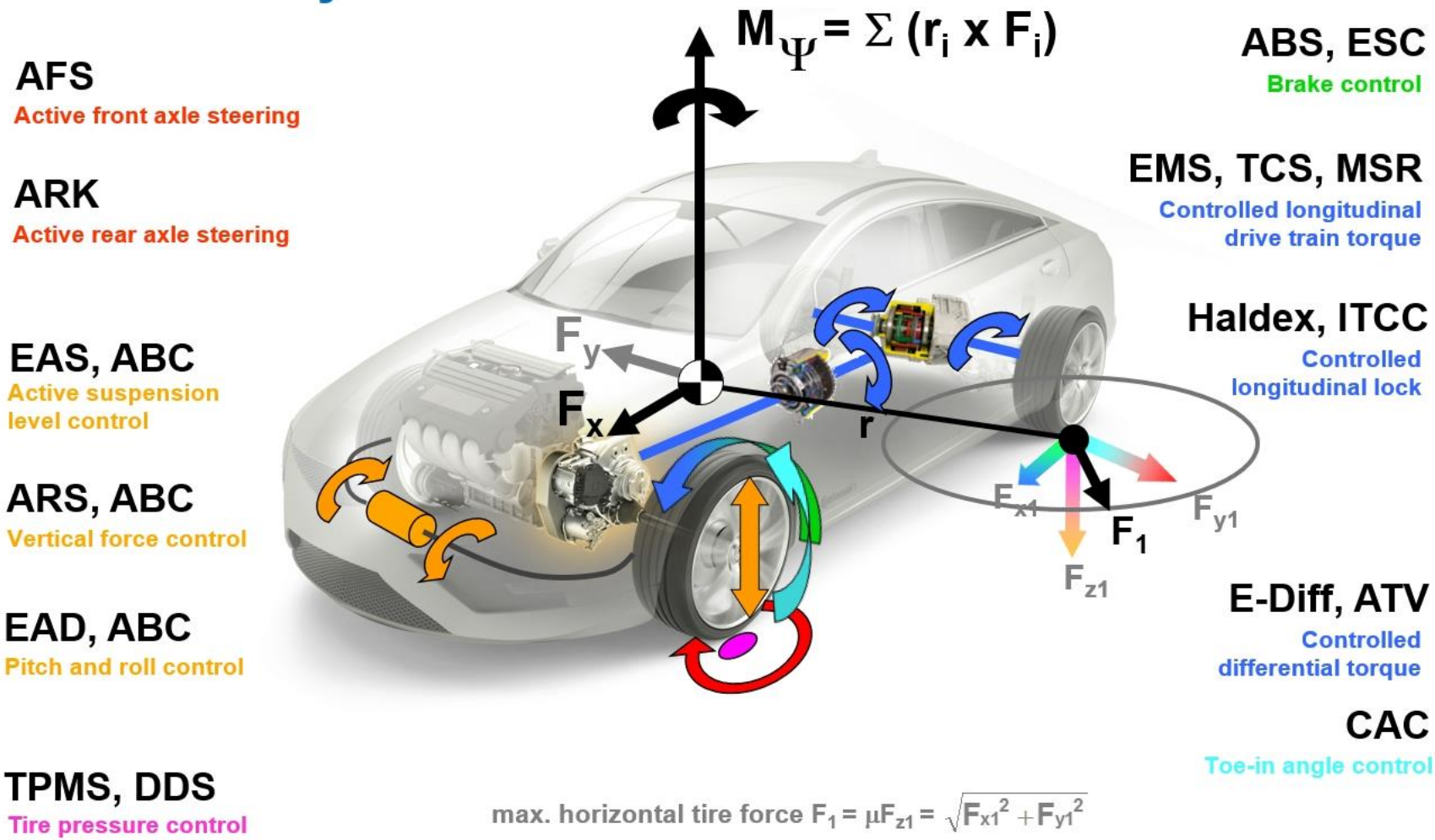

Source: Peter Lauer, Continental AG, Frankfurt

Signal flow: with advanced driver assistance systems and decentralized control

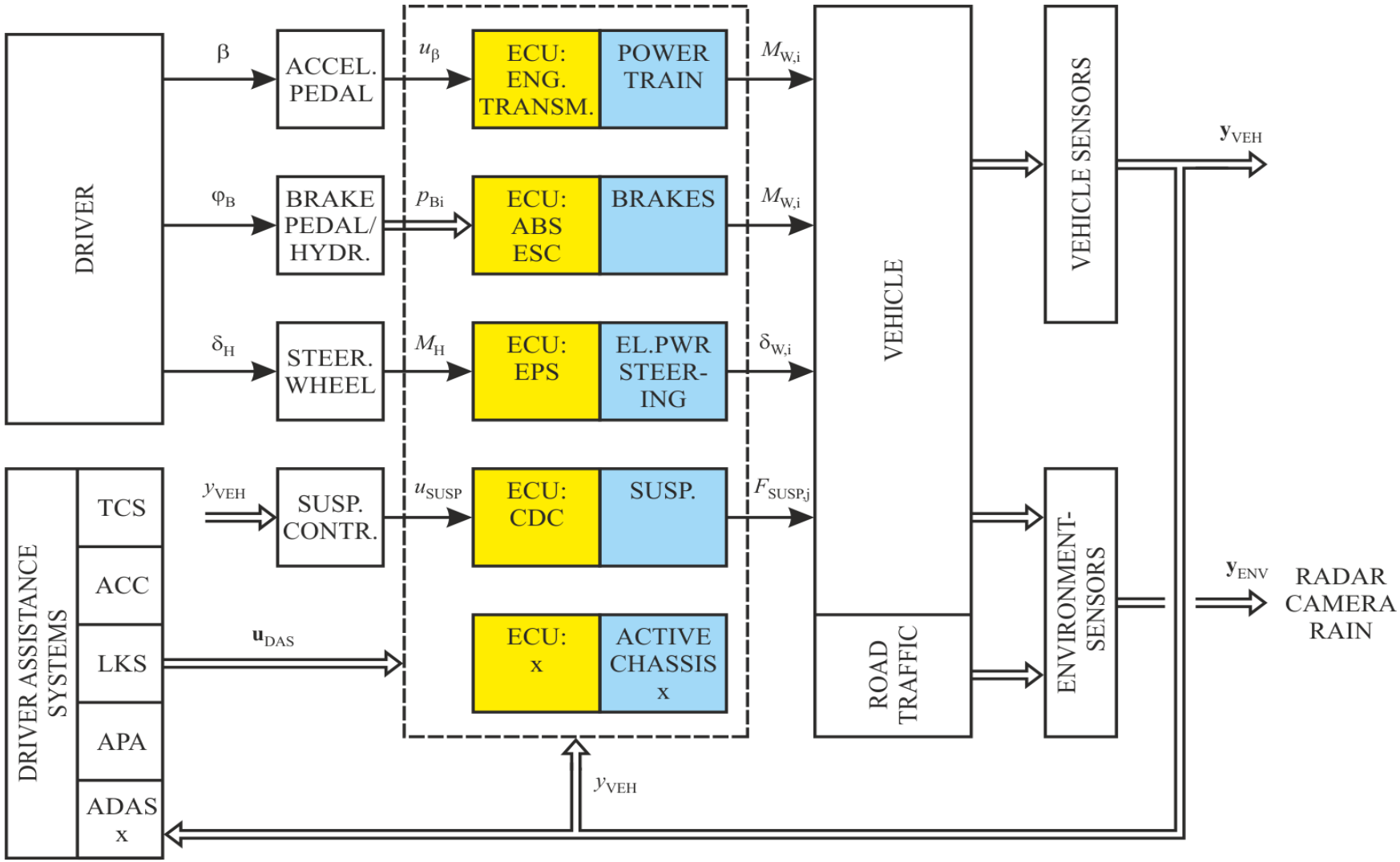

Signal flow: with advanced driver assistance systems and integrated chassis control

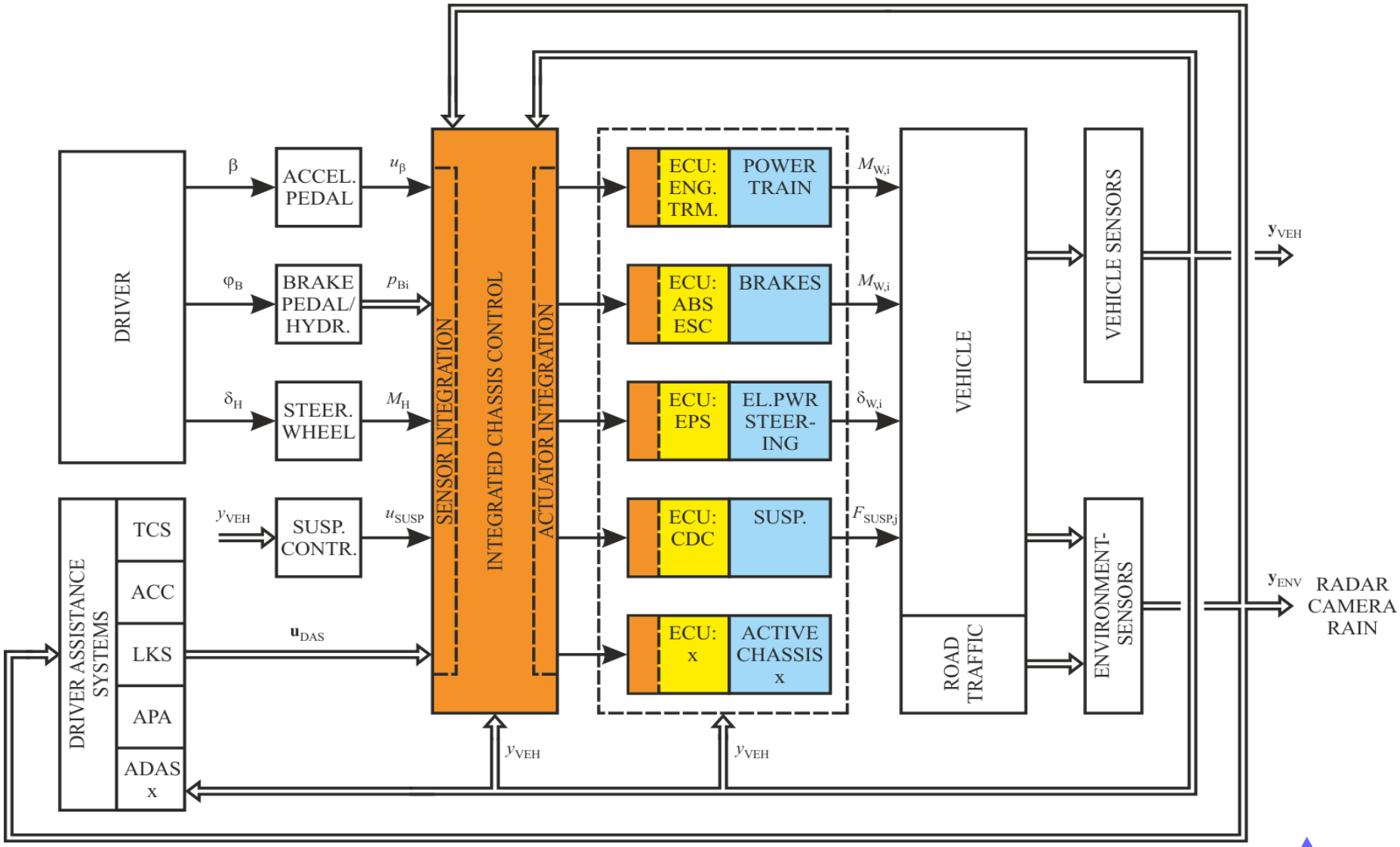

• AUTOSAR: Standardized automotive software architecture

- **Basic software layer:** hardware dependent services (bus connect., microcontrollers)
- **Runtime environment (RTE):** virtual function bus, decouples application software from hardware
- **Application layer:** software functions, hardware independent

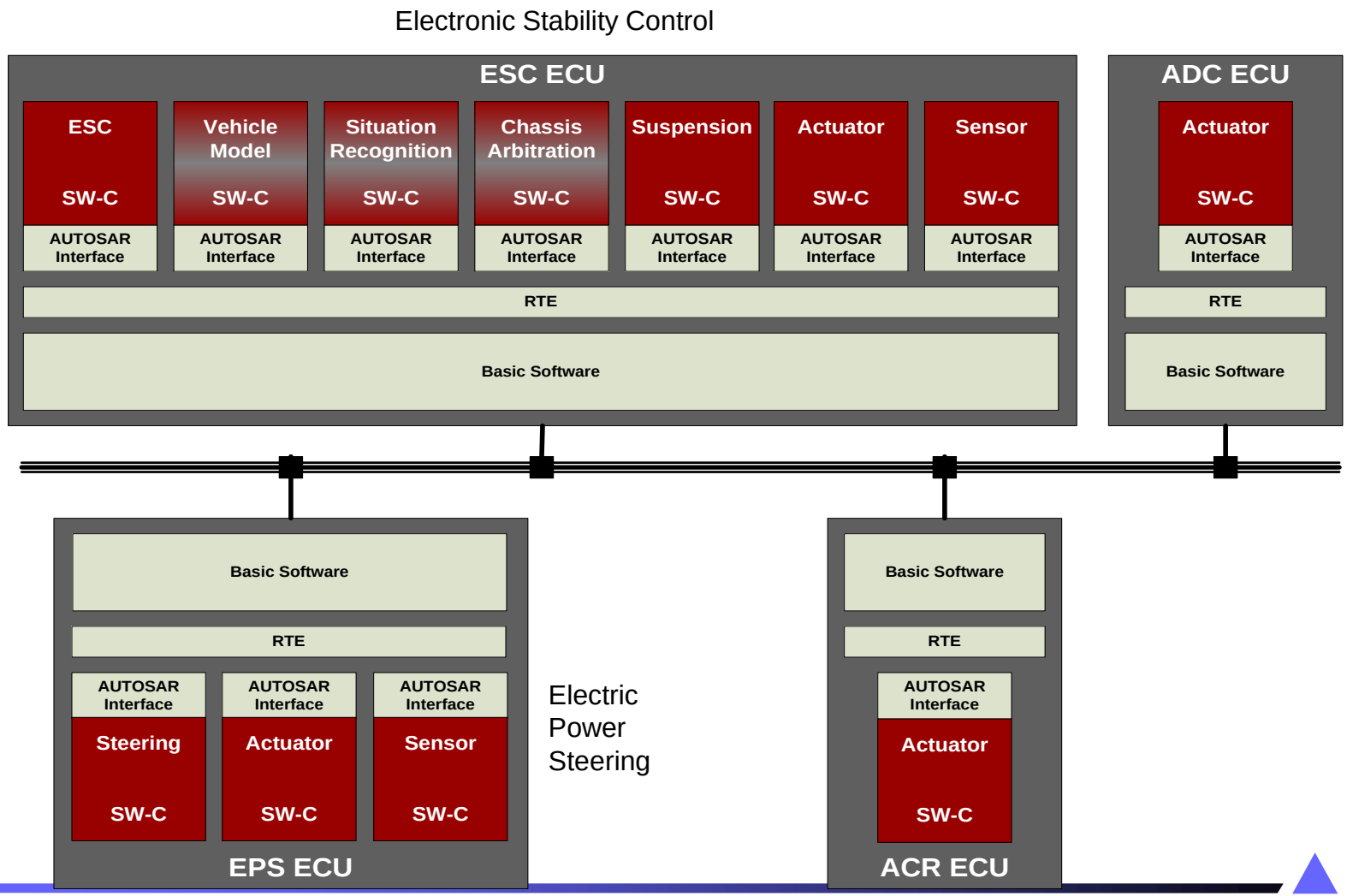

Source:.
Andreas Marx,
TRW; iQPC 2007,

Layered AUTOSAR structure for interconnection of ECUs

Automotive Control Systems

- Introduction
- Mechatronic components and driver assistance systems
- Control structures for automobiles
- Modelling , state and parameter estimation of vehicle dynamics
- From driver assistance systems to automatic driving
- Collision avoidance systems
- Fault tolerant issues
- Outlook

Simulation tool chain for the virtual development of drive dynamics (OEM)

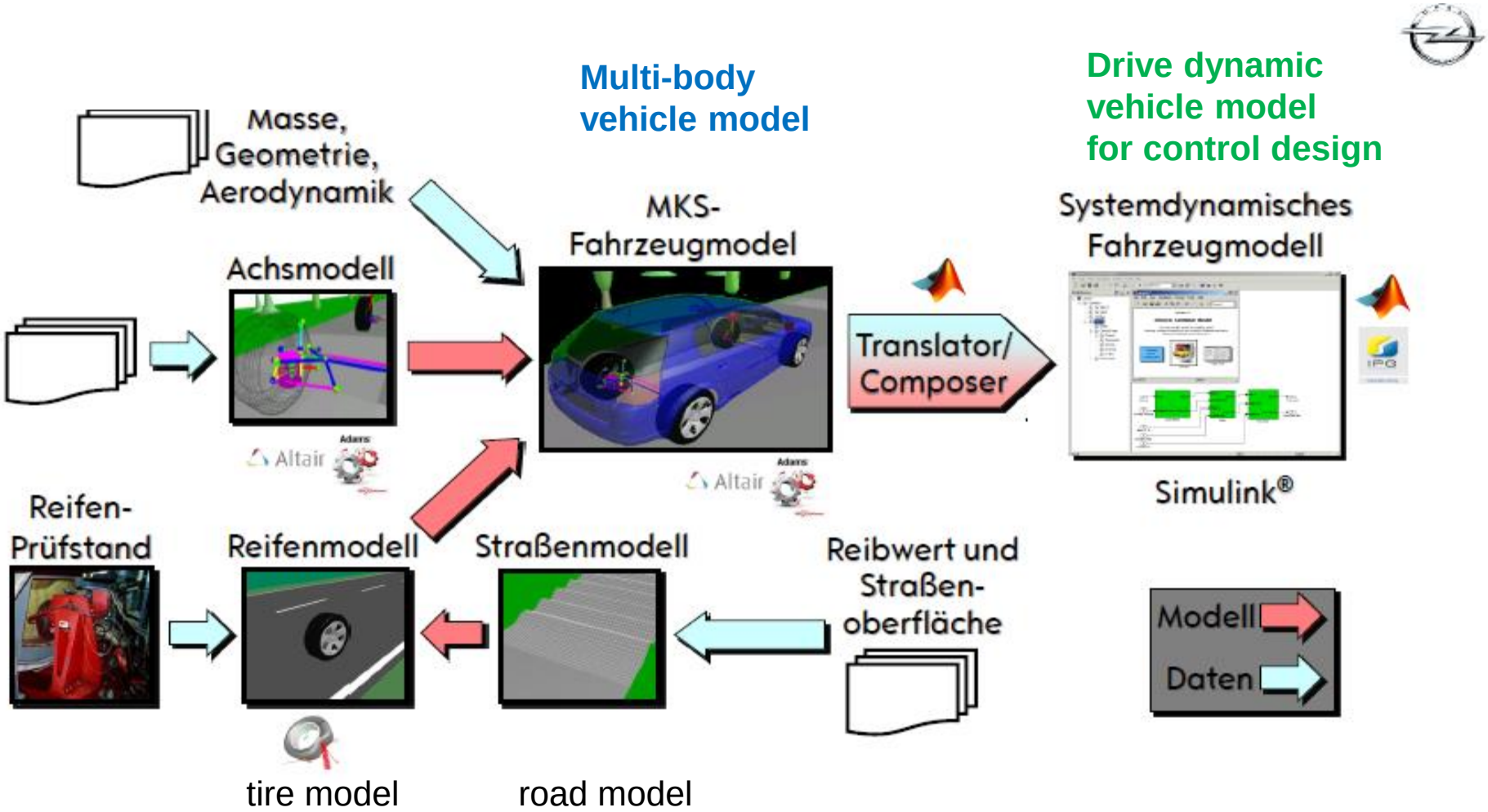

Source: Michael Kochem, (Opel): Virtual tool chain, VDI-GMA Ausschuss AUTOREG, 5_2016

Simulation tool chain for the virtual development of drive dynamics (OEM)

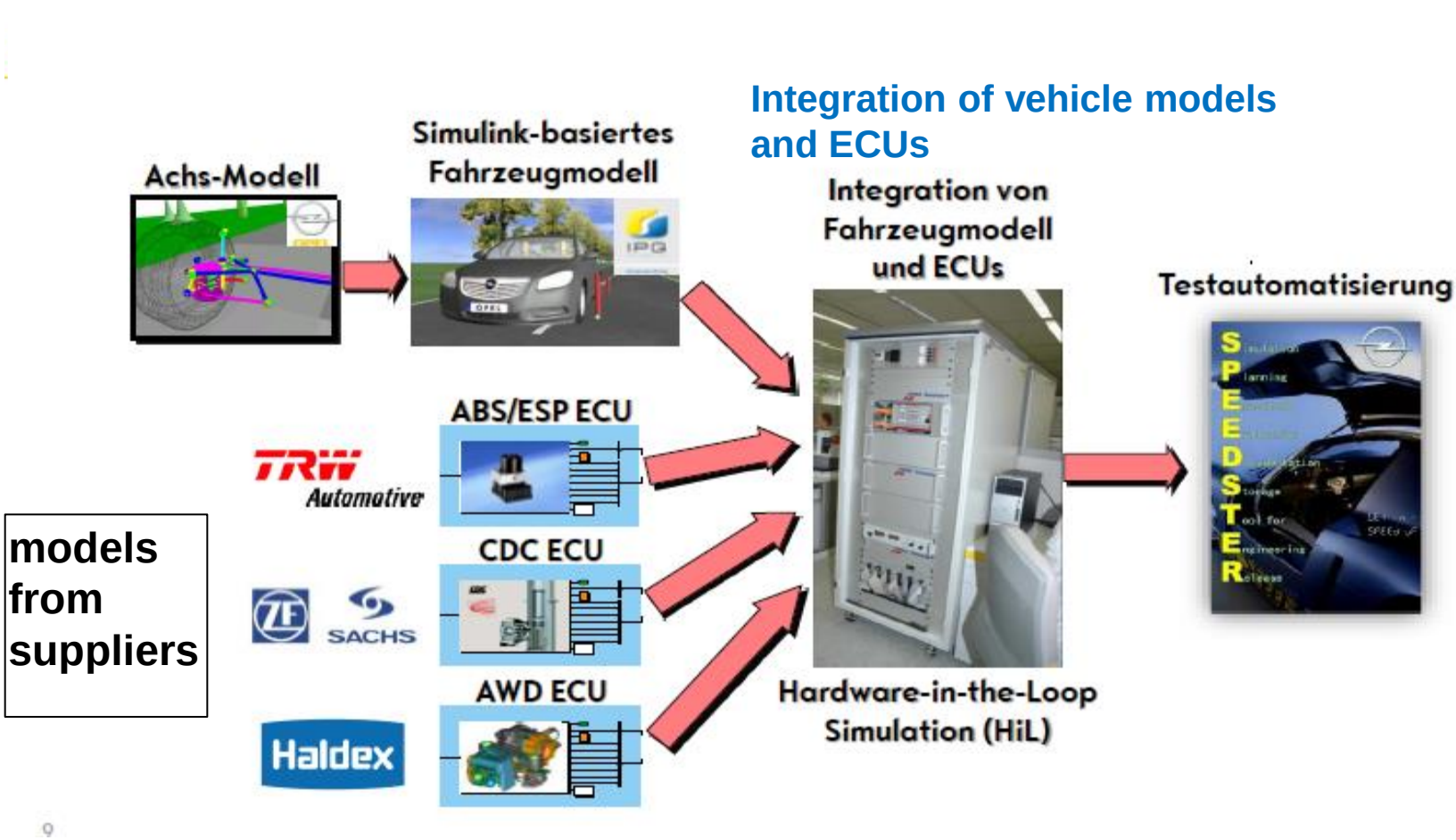

Source: Michael Kochem (Opel) :Virtual tool chain, VDI-GMA Ausschuss AUTOREG, 5_2016

Example: Modeling of lateral dynamics, basic model structure

(1) Non-linear Two Track Model

Non-linear system description:

$$\mathbf{x} = [v, \beta, \dot{\psi}] \qquad \dot{\mathbf{x}} = \mathbf{f}(\mathbf{x}, \mathbf{u}) = \begin{bmatrix} \dot{v}(\mathbf{x}, \mathbf{u}) \\ \dot{\beta}(\mathbf{x}, \mathbf{u}) \\ \ddot{\psi}(\mathbf{x}, \mathbf{u}) \end{bmatrix}$$

Velocity of center of gravity:

$$\dot{v} = \cos(\beta) \cdot \frac{\sum F_x^V}{m} + \sin(\beta) \cdot \frac{\sum F_y^V}{m}$$

Side slip angle dynamics:

$$\dot{\beta} = -\frac{\sin(\beta)}{v} \cdot \frac{\sum F_x^V}{m} + \frac{\cos(\beta)}{v} \cdot \frac{\sum F_y^V}{m} - \dot{\psi}$$

Yaw dynamics:

$$\ddot{\psi} = \frac{1}{J_z}\left[\left(F_{y,fl}^V + F_{y,fr}^V\right) \cdot l_f - \left(F_{y,rl}^V + F_{y,rr}^V\right) \cdot l_r \ldots\right]$$

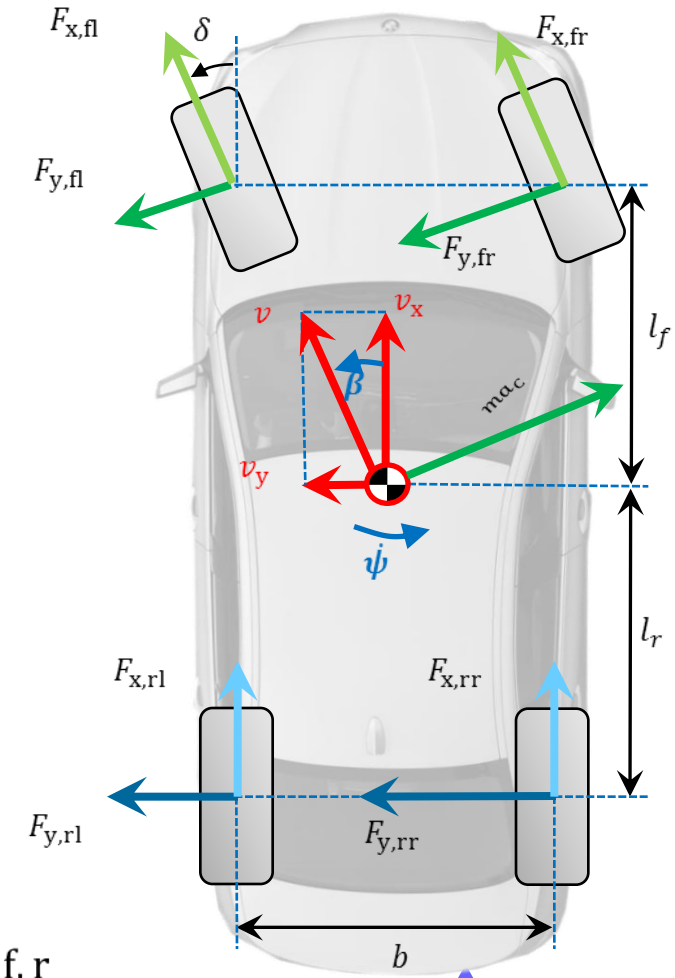

Introducing non-linear lateral and longitudinal tire model:

$$F_{y,ij} = f(\alpha_{ij}, \lambda_{ij}, F_{z,ij}) \qquad F_{x,ij} = f(\alpha_{ij}, \lambda_{ij}, F_{z,ij}) \qquad j = l, r \qquad i = f, r$$

Modeling of lateral dynamics: tire forces

(2) Non-linear One Track Model

Non-linear axle force models for front and rear axle:

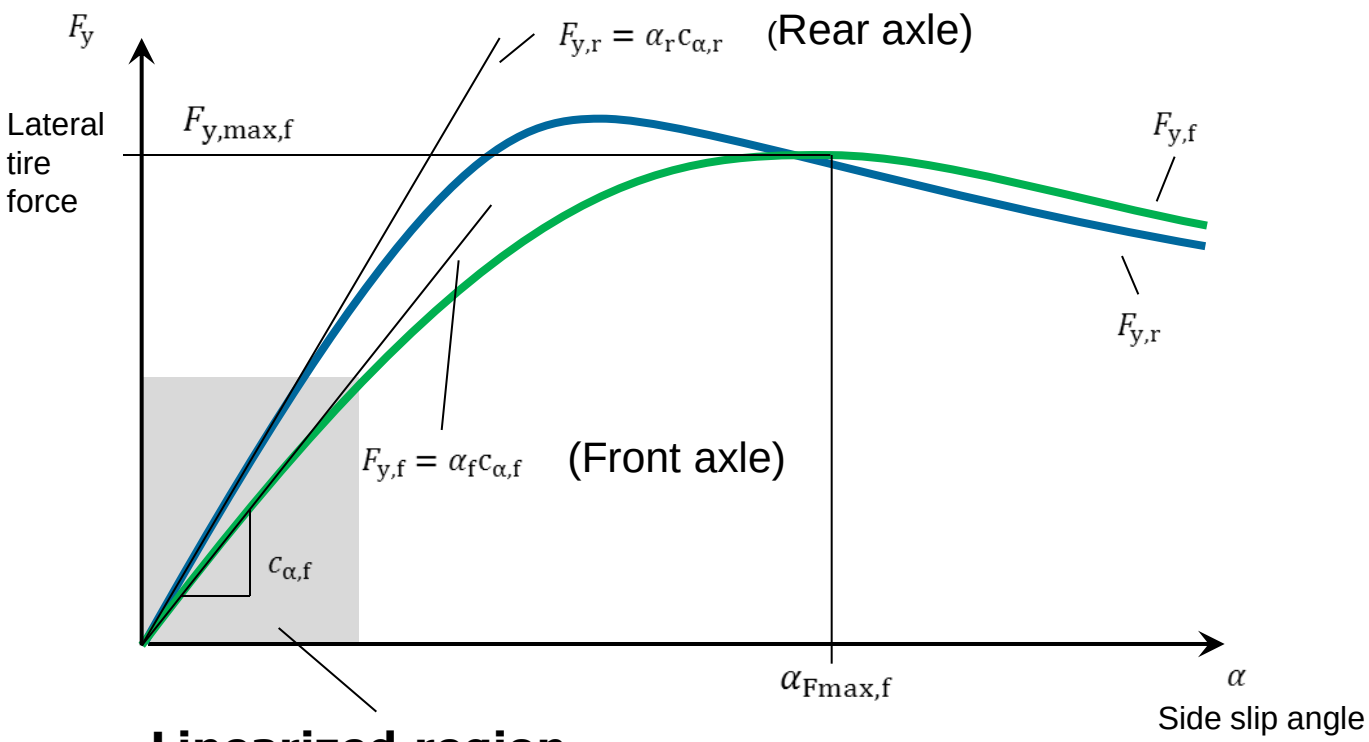

Linearized region
→ cornering stiffness

$$F_{y,f} = f(F_{z,f}, \alpha_f, \lambda_f, c_{\alpha,f}, \alpha_{Fmax,f}, F_{y,max,f})$$

$$F_{y,r} = f(F_{z,r}, \alpha_r, \lambda_r, c_{\alpha,r}, \alpha_{Fmax,r}, F_{y,max,r})$$

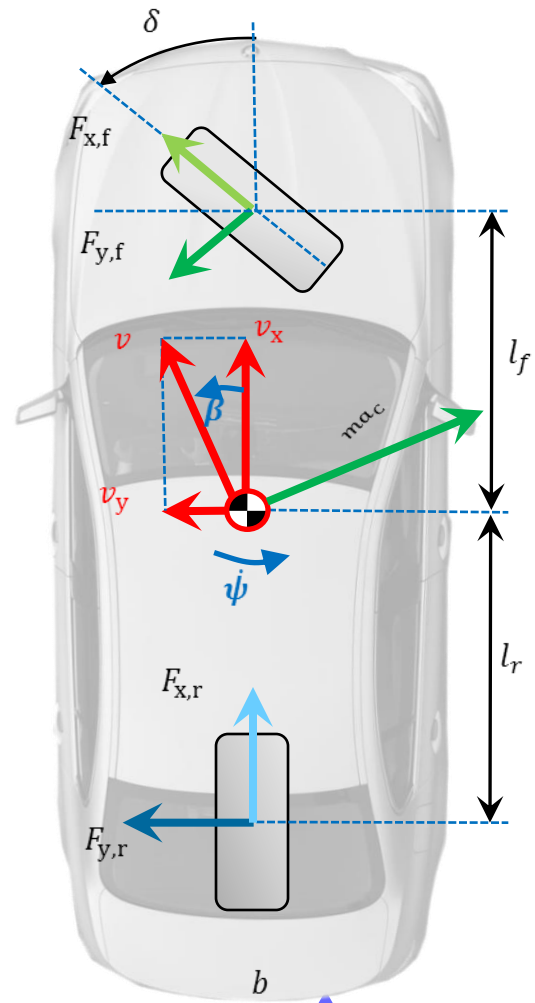

Modeling of lateral dynamics: simplification for low lateral dynamics

(3) Linear One Track Model

Side slip angles at front and rear axle:

$$\alpha_f \approx \delta - \beta - \frac{l_f \dot{\psi}}{v} \qquad \alpha_r \approx -\beta + \frac{l_r \dot{\psi}}{v}$$

With constant velocity, linear tire model and side slip angles the **linear state space description** of the single track model is derived:

$$\dot{\mathbf{x}} = \mathbf{A}\,\mathbf{x} + \mathbf{B}\,\mathbf{u}$$

$$\begin{bmatrix} \dot{\beta} \\ \ddot{\psi} \end{bmatrix} = \overbrace{\begin{bmatrix} -\dfrac{c_{\alpha,f} + c_{\alpha,r}}{m \cdot v} & \dfrac{l_r c_{\alpha,r} - l_f c_{\alpha,f}}{m \cdot v^2} - 1 \\ \dfrac{l_r c_{\alpha,r} - l_f c_{\alpha,f}}{J_z} & -\dfrac{l_r^2 c_{\alpha,r} - l_f^2 c_{\alpha,f}}{J_z \cdot v} \end{bmatrix}}^{\mathbf{A}} \begin{bmatrix} \beta \\ \dot{\psi} \end{bmatrix} + \overbrace{\begin{bmatrix} \dfrac{c_{\alpha,f}}{m \cdot v} \\ \dfrac{l_f c_{\alpha,f}}{J_z} \end{bmatrix}}^{\mathbf{B}} \delta$$

[slip angle]
[yaw rate]

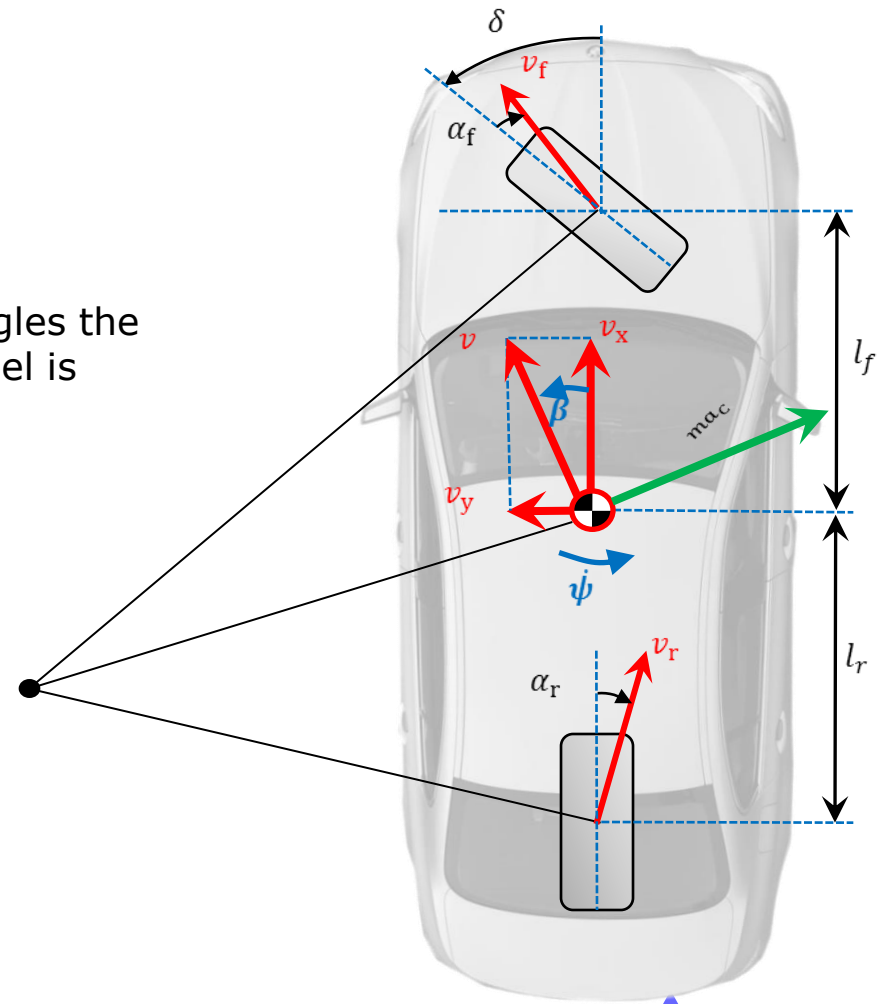

Modeling of lateral dynamics: ranges for linear and nonlinear tire forces

(4) Non-linear One Track Model

Non-linear axle force models for front and rear axle:

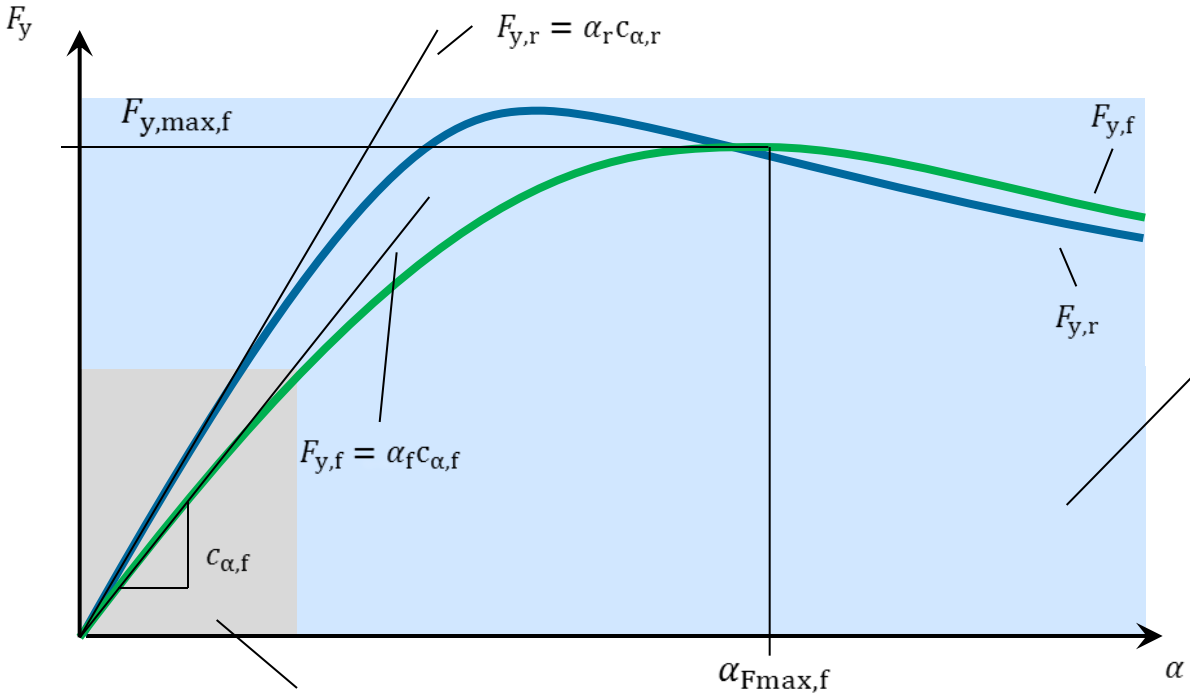

area that is covered by the **non-linear one track model:**

$$\dot{\mathbf{x}} = \mathbf{f}(\mathbf{x}, \mathbf{u}) = \begin{bmatrix} \dot{v}(\mathbf{x}, \mathbf{u}) \\ \dot{\beta}(\mathbf{x}, \mathbf{u}) \\ \ddot{\psi}(\mathbf{x}, \mathbf{u}) \end{bmatrix}$$

linear one track model:

$$\dot{\mathbf{x}} = \mathbf{A}\mathbf{x} + \mathbf{B}\mathbf{u}$$

Model based design, Estimation and Control of lateral dynamics (yaw rate and slip angle): low and high dynamics

Structure

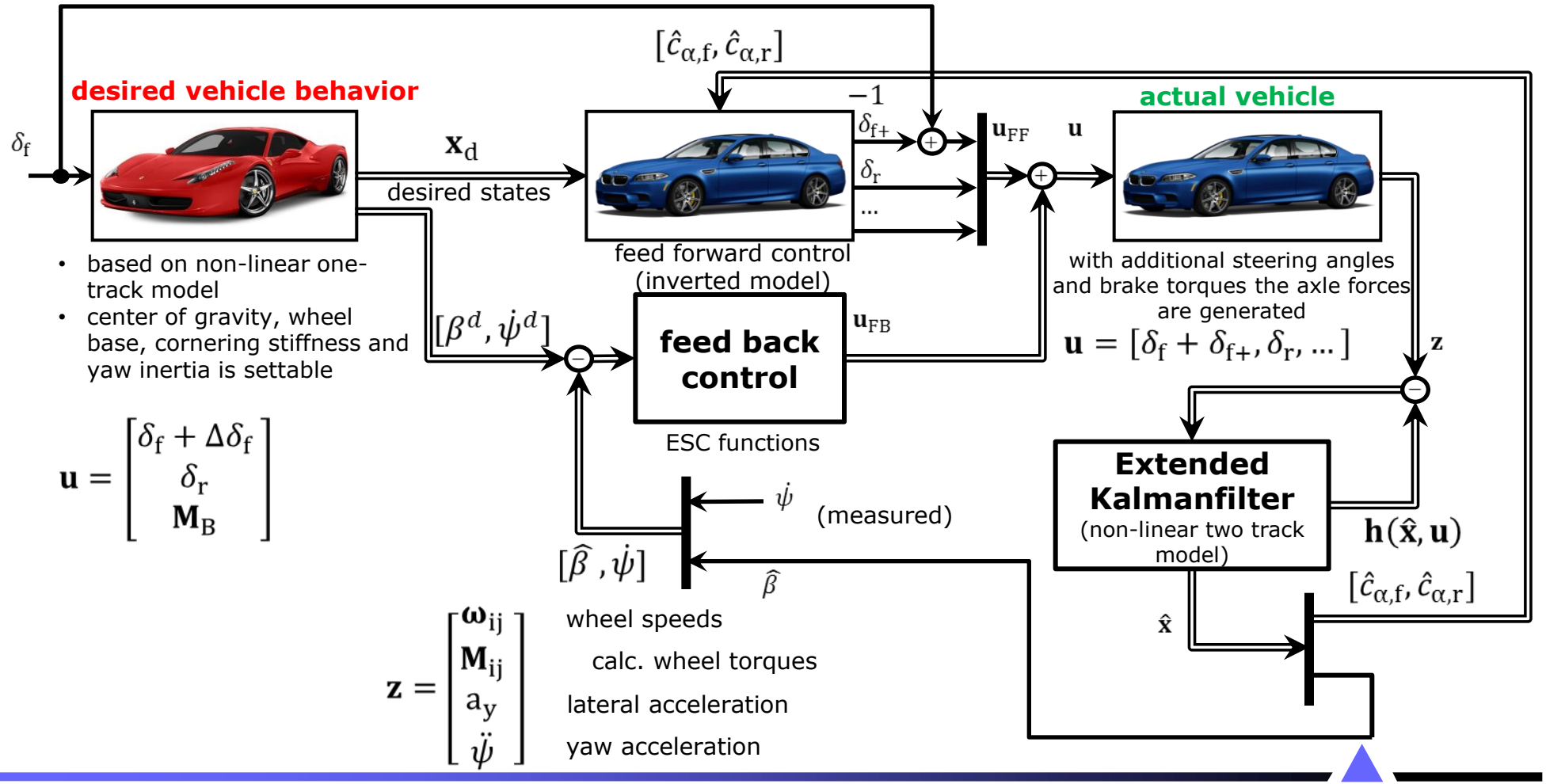

Estimation (Experimental Results)

Side Slip Angle β

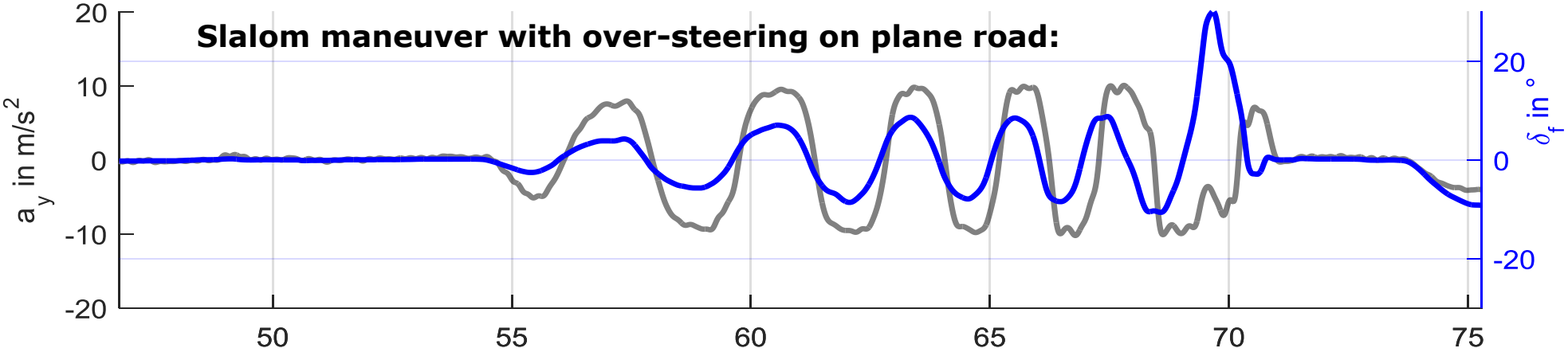

The side slip angle estimation follows the reference signal (measured with optical Correvit sensor)

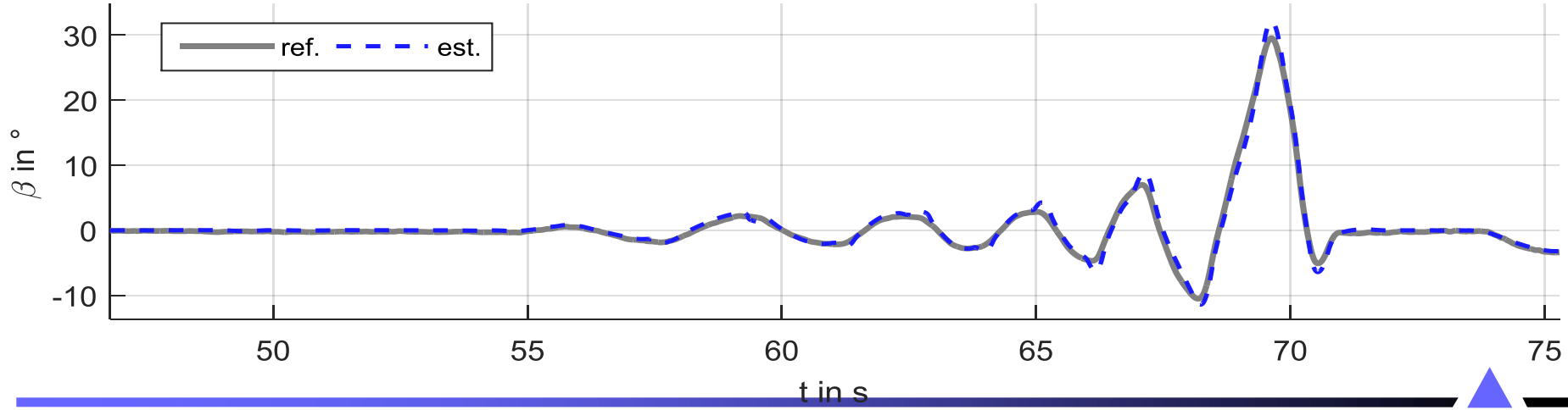

Estimation (Experimental Results)

Cornering Stiffnesses c_α Adaption

(c_α: part of non-linear one track axle force model)

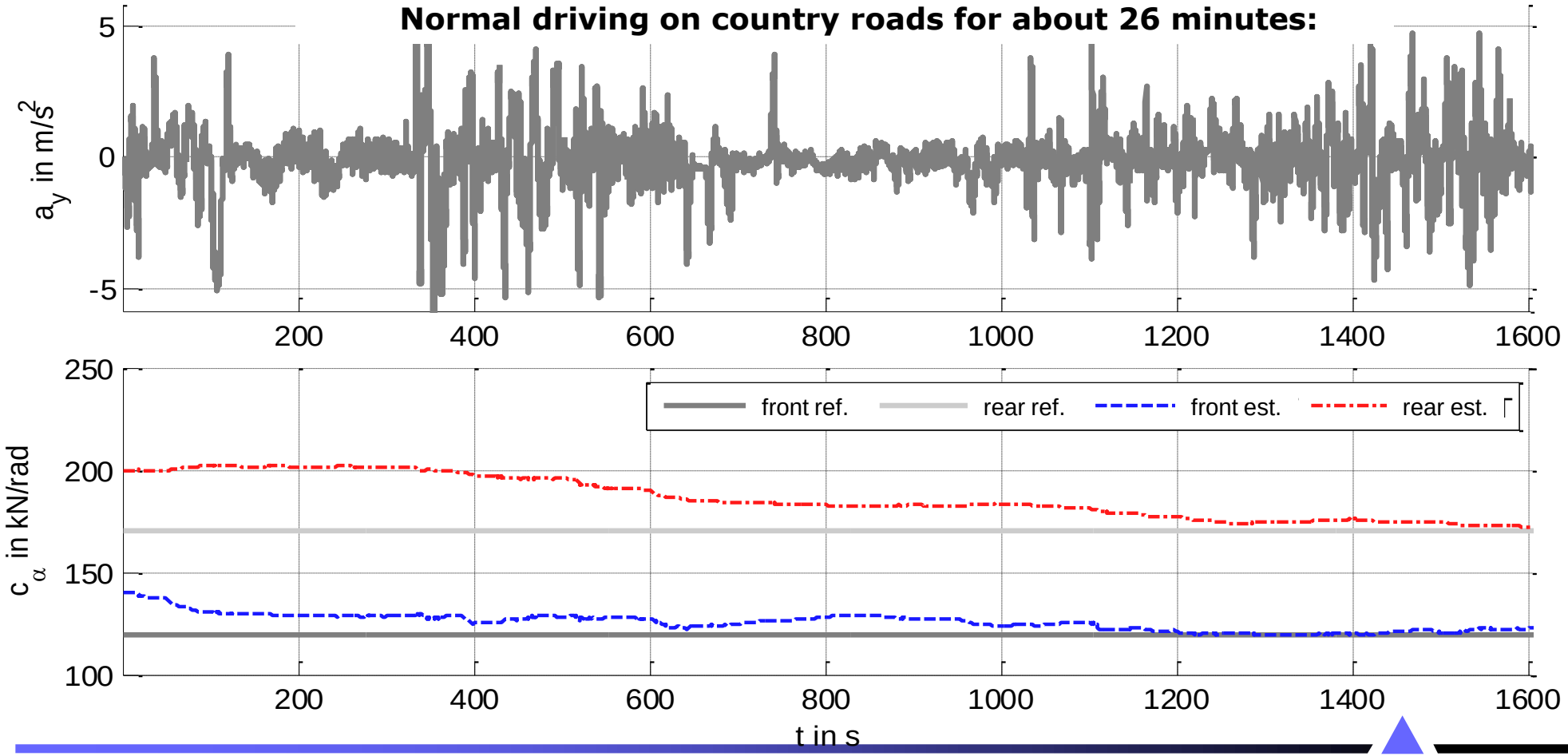

Control design (Simulation)

Example for Active Front Steering

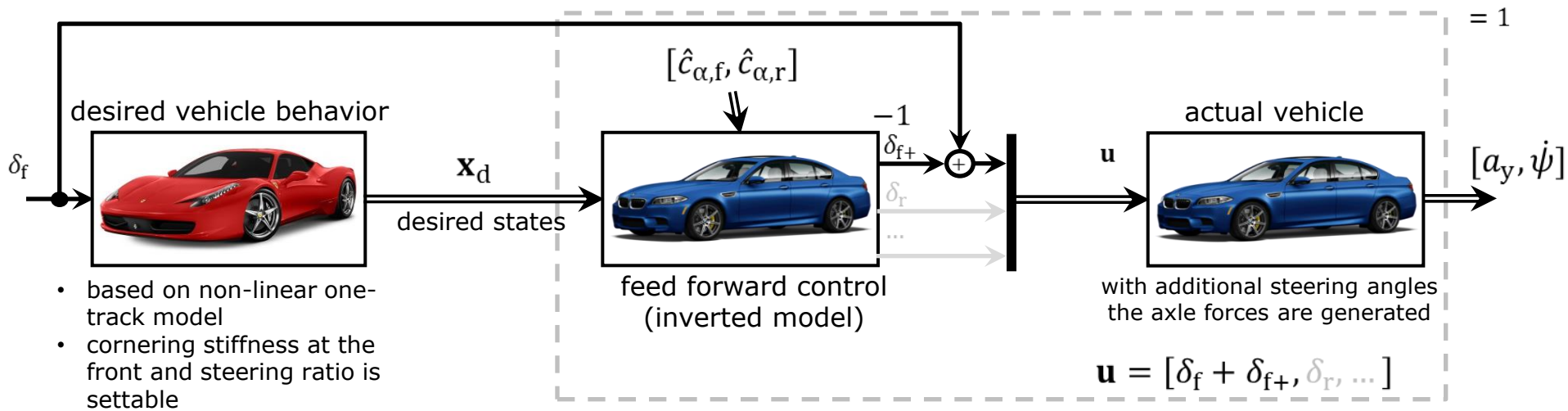

- based on non-linear one-track model
- cornering stiffness at the front and steering ratio is settable

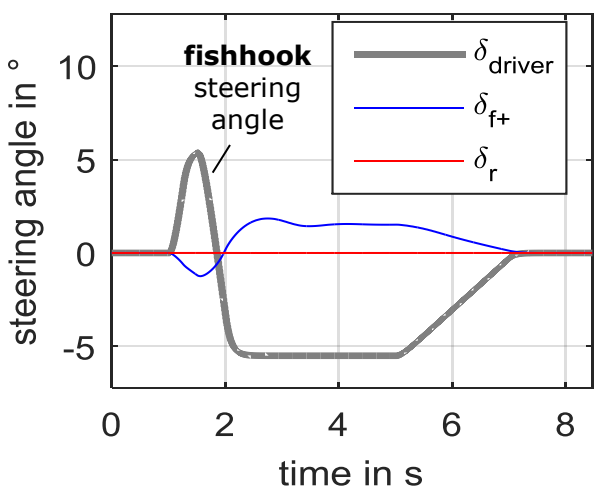

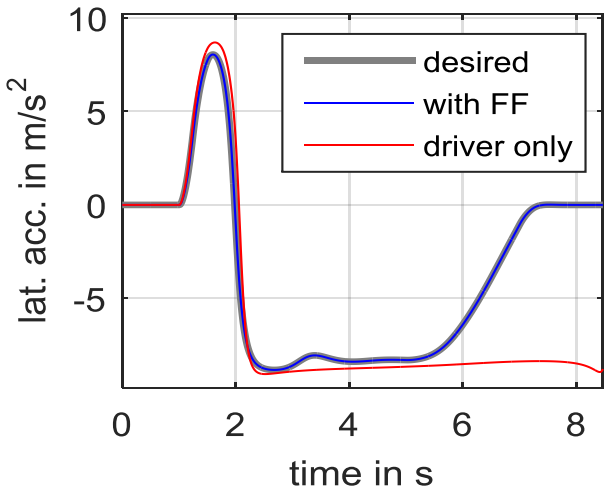

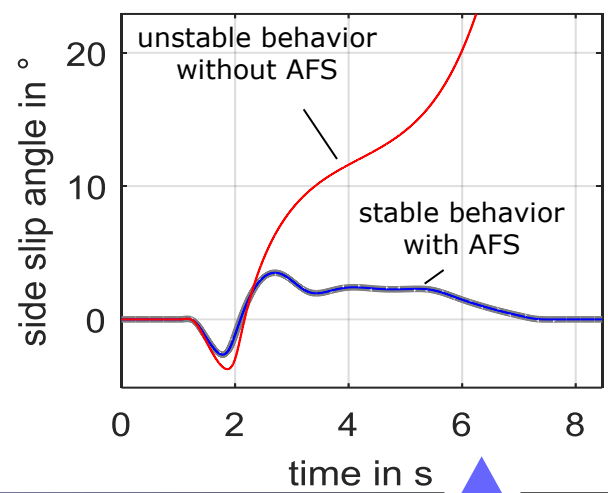

Automotive Control Systems

- Introduction
- Mechatronic components and driver assistance systems
- Control structures for automobiles
- Modelling and parameter estimation of vehicle dynamics
- From driver assistance systems to automatic driving
- Collision avoidance systems
- Fault tolerant issues
- Outlook

From assisted driving to automated driving

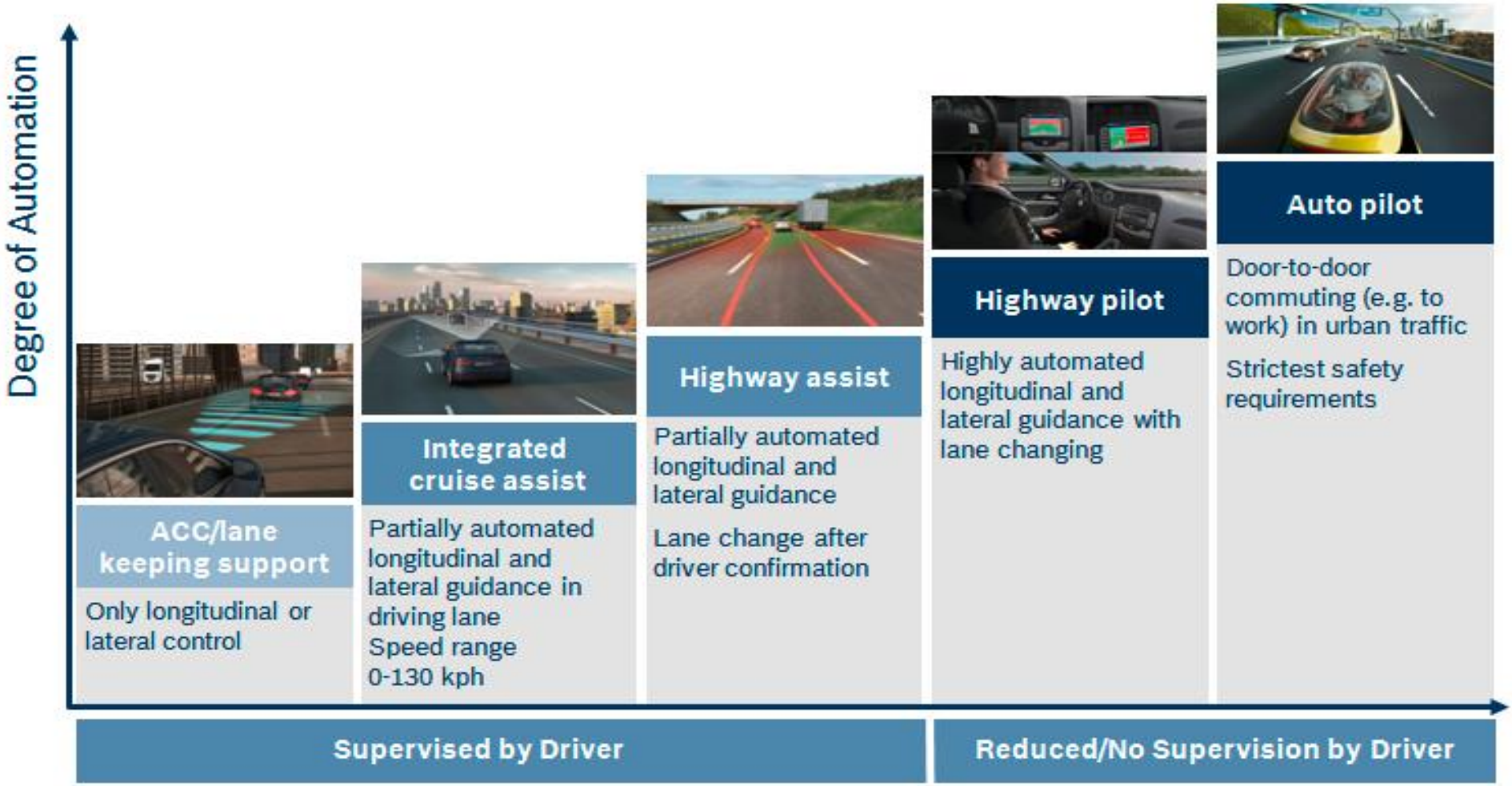

Source: Alexander Haeussler; Bosch; Automated Driving …, ATZ Conf. ChassisTec ,Munic h 2015

Signal flow : Manual Driving (1)

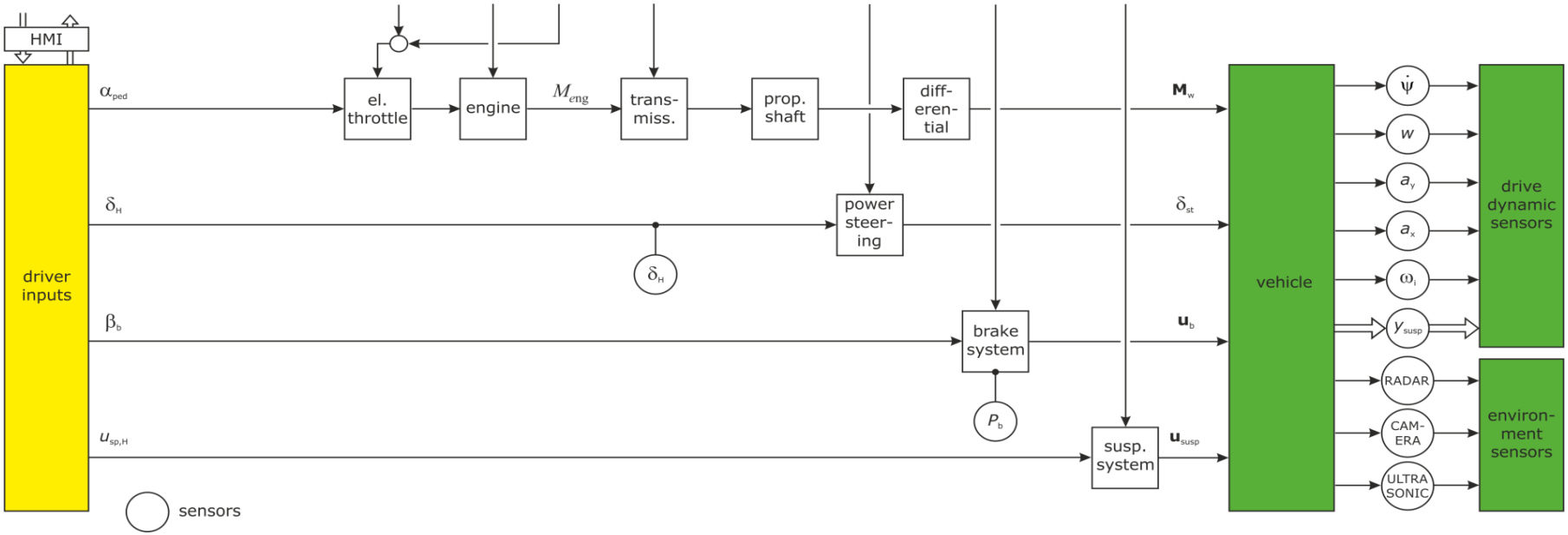

Signal flow : Driver and electronic control systems (2a)

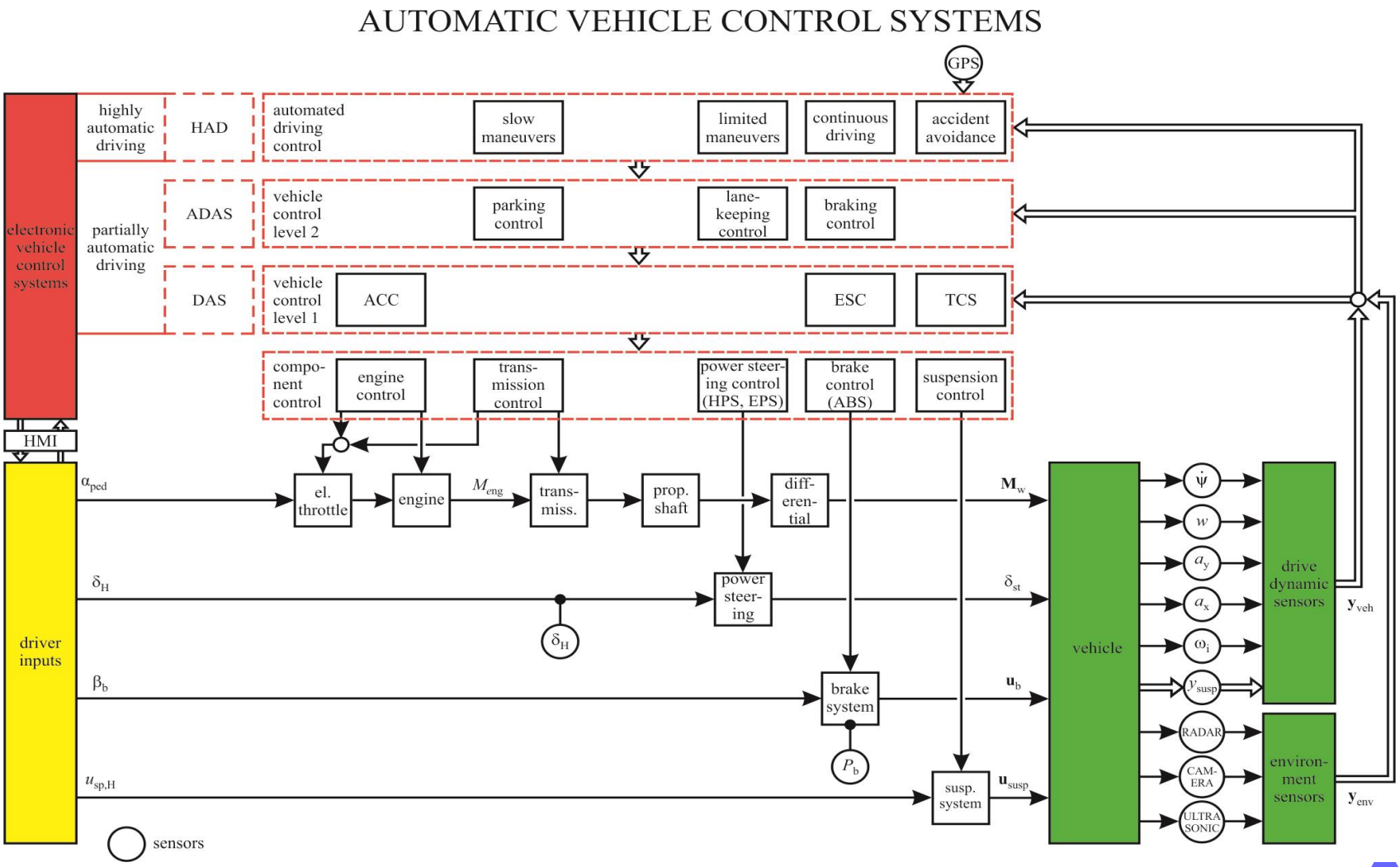

Signal flow : Electronic hierarchical control levels for automatic driving (2b)

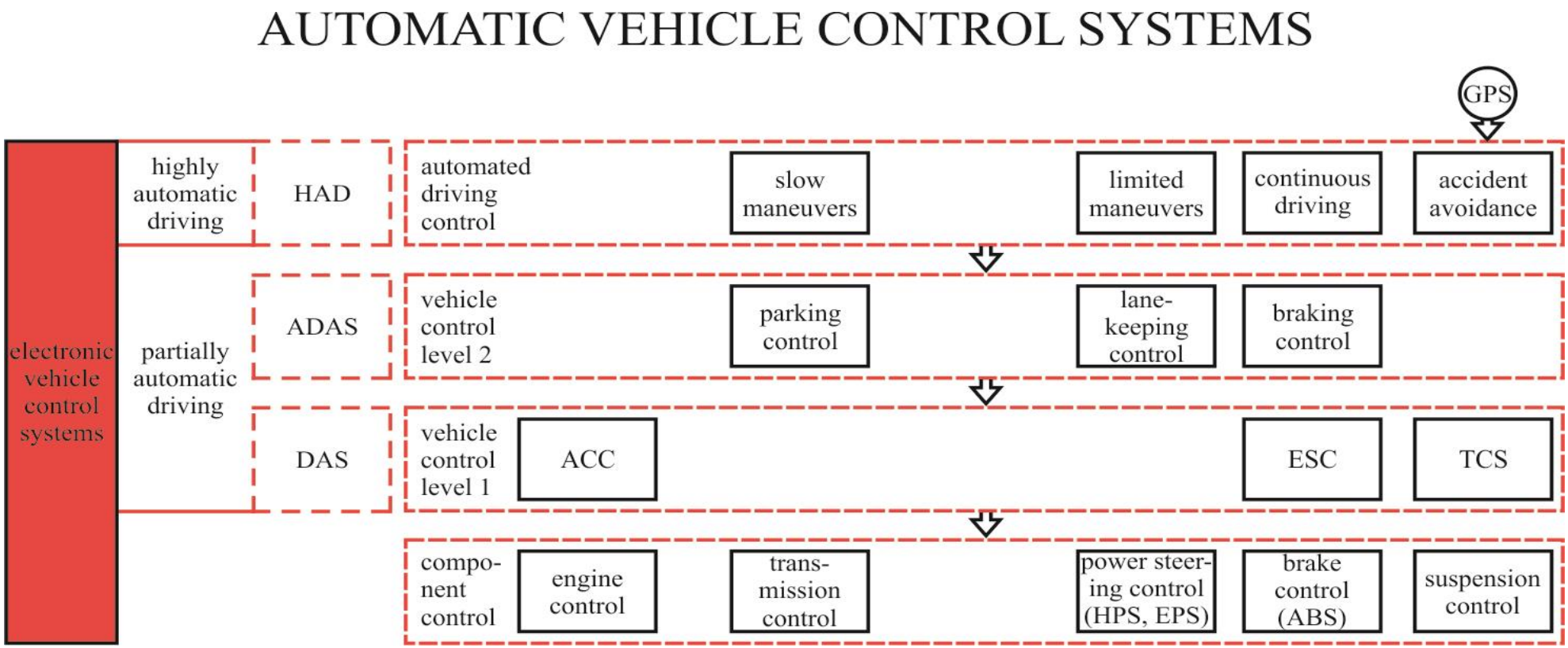

		DEGREES OF AUTOMATIC DRIVING			
	GENERAL DESCRIPTION	Driver Assistance System (DAS)	Advanced Driver Assistence System (ADAS)	Automatic Driving (partially)	Automatic Driving (fully)

references: VDA, Ruchatz (AUTOREG 2013)

			DEGREES OF AUTOMATIC DRIVING			
		GENERAL DESCRIPTION	Driver Assistance System (DAS)	Advanced Driver Assistence System (ADAS)	Automatic Driving (partially)	Automatic Driving (fully)
MANEUVERS	NOR-MAL	KIND OF DRIVING				
		SLOW MANEUVERS				
		MANEUVERS WITH LIMITED DURATION				
		CONTINUOUS DRIVING				
	CON-FLICT	ACCIDENT AVOIDANCE MANEUVERS				
DRIVER		ROLE OF SYSTEM & DRIVER				

references: VDA, Ruchatz (AUTOREG 2013)

DEGREES OF AUTOMATIC DRIVING

		GENERAL DESCRIPTION	Driver Assistance System (DAS)		Advanced Driver Assistence System (ADAS)	Automatic Driving (partially)	Automatic Driving (fully)
MANEUVERS	NOR-MAL	KIND OF DRIVING	assisted driving				
			longitudinal control · acceler. · braking	lateral control · steering (parking)			
		SLOW MANEUVERS	· jam assistant (stop & go)	· parking assistant (lateral)			
		MANEUVERS WITH LIMITED DURATION		· lane keeping assistant			
		CONTINUOUS DRIVING	· speed / distance control assistant (ACC)				
	CON-FLICT	ACCIDENT AVOIDANCE MANEUVERS	WARNINGS				
			· emergency braking	· blind spot warning			
DRIVER		ROLE OF SYSTEM & DRIVER	· assistance for longitudinal and/or lateral control				

references: VDA, Ruchatz (AUTOREG 2013)

DEGREES OF AUTOMATIC DRIVING

		GENERAL DESCRIPTION	Driver Assistance System (DAS)		Advanced Driver Assistence System (ADAS)		Automatic Driving (partially)	Automatic Driving (fully)
MANEUVERS	NOR-MAL	KIND OF DRIVING	assisted driving		advanced assisted driving			
			longitudinal control · acceler. · braking	lateral control · steering (parking)	longitudinal control	lateral control		
		SLOW MANEUVERS	· jam assistant (stop & go)	· parking assistant (lateral)	· parking pilot (front, back, lateral) · jam pilot			
		MANEUVERS WITH LIMITED DURATION		· lane keeping assistant		· lane keeping control		
		CONTINUOUS DRIVING	· speed / distance control assistant (ACC)		· highway assistant - speed / distance control	· highway assistant - lane keeping control		
	CON-FLICT	ACCIDENT AVOIDANCE MANEUVERS	WARNINGS		WARNINGS			
			· emergency braking	· blind spot warning	· emergency braking	· emergency steering (evasion)		
DRIVER		ROLE OF SYSTEM & DRIVER	· assistance for longitudinal and/or lateral control		· longitudinal automatic control for defined cases · driver supervises all time, takes over for other cases			

references: VDA, Ruchatz (AUTOREG 2013)

DEGREES OF AUTOMATIC DRIVING

		GENERAL DESCRIPTION	Driver Assistance System (DAS)		Advanced Driver Assistence System (ADAS)		Automatic Driving (partially)	Automatic Driving (fully)
MANEUVERS	NOR-MAL	KIND OF DRIVING	assisted driving		advanced assisted driving		highly automatic driving (HAD)	
			longitudinal control · acceler. · braking	lateral control · steering (parking)	longitudinal control	lateral control	· driver inside · longitudinal control · lateral control	
		SLOW MANEUVERS	· jam assistant (stop & go)	· parking assistant (lateral)	· parking pilot (front, back, lateral) · jam pilot		· parking pilot · jam pilot	
		MANEUVERS WITH LIMITED DURATION		· lane keeping assistant		· lane keeping control	· lane change pilot · overtaking pilot · crossing pilot	
		CONTINUOUS DRIVING	· speed / distance control assistant (ACC)		· highway assistant - speed / distance control	· highway assistant - lane keeping control	· highway pilot · rural road pilot	
	CON-FLICT	ACCIDENT AVOIDANCE MANEUVERS	WARNINGS		WARNINGS		WARNINGS	
			· emergency braking	· blind spot warning	· emergency braking	· emergency steering (evasion)	· emergency braking · emergency steering	
DRIVER		ROLE OF SYSTEM & DRIVER	· assistance for longitudinal and/or lateral control		· longitudinal automatic control for defined cases · driver supervises all time, takes over for other cases		· longitudinal & lateral automatic control in many cases · driver does not have to supervise all time, takes over on request	

references: VDA, Ruchatz (AUTOREG 2013)

DEGREES OF AUTOMATIC DRIVING

		GENERAL DESCRIPTION	Driver Assistance System (DAS)		Advanced Driver Assistence System (ADAS)		Automatic Driving (partially)	Automatic Driving (fully)	
MANEUVERS	NOR-MAL	KIND OF DRIVING	assisted driving		advanced assisted driving		highly automatic driving (HAD)	fully automatic driving (FAD)	
			longitudinal control · acceler. · braking	lateral control · steering (parking)	longitudinal control	lateral control	· driver inside · longitudinal control · lateral control	driver inside	driver outside
		SLOW MANEUVERS	· jam assistant (stop & go)	· parking assistant (lateral)	· parking pilot (front, back, lateral) · jam pilot		· parking pilot · jam pilot	· parking pilot	· valet park-ing pilot · shunting pilot (HLV)
		MANEUVERS WITH LIMITED DURATION		· lane keeping assistant		· lane keeping control	· lane change pilot · overtaking pilot · crossing pilot	· driving maneuver pilot	
		CONTINUOUS DRIVING	· speed / distance control assistant (ACC)		· highway assistant - speed / distance control	· highway assistant - lane keeping control	· highway pilot · rural road pilot	· highway pilot · rural road pilot · city pilot	
	CON-FLICT	ACCIDENT AVOIDANCE MANEUVERS	WARNINGS		WARNINGS		WARNINGS	WARNINGS	
			· emergency braking	· blind spot warning	· emergency braking	· emergency steering (evasion)	· emergency braking · emergency steering	· emergency braking · emergency steering · freespace maneuver	
DRIVER		ROLE OF SYSTEM & DRIVER	· assistance for longitudinal and/or lateral control		· longitudinal automatic control for defined cases · driver supervises all time, takes over for other cases		· longitudinal & lateral automatic control in many cases · driver does not have to supervise all time, takes over on request	· performes complete driving · driver does not have to drive	

references: VDA, Ruchatz (AUTOREG 2013)

Surround sensors: near and long range radar: front and rear, near and long range infrared, stereo camera, ultra sonic

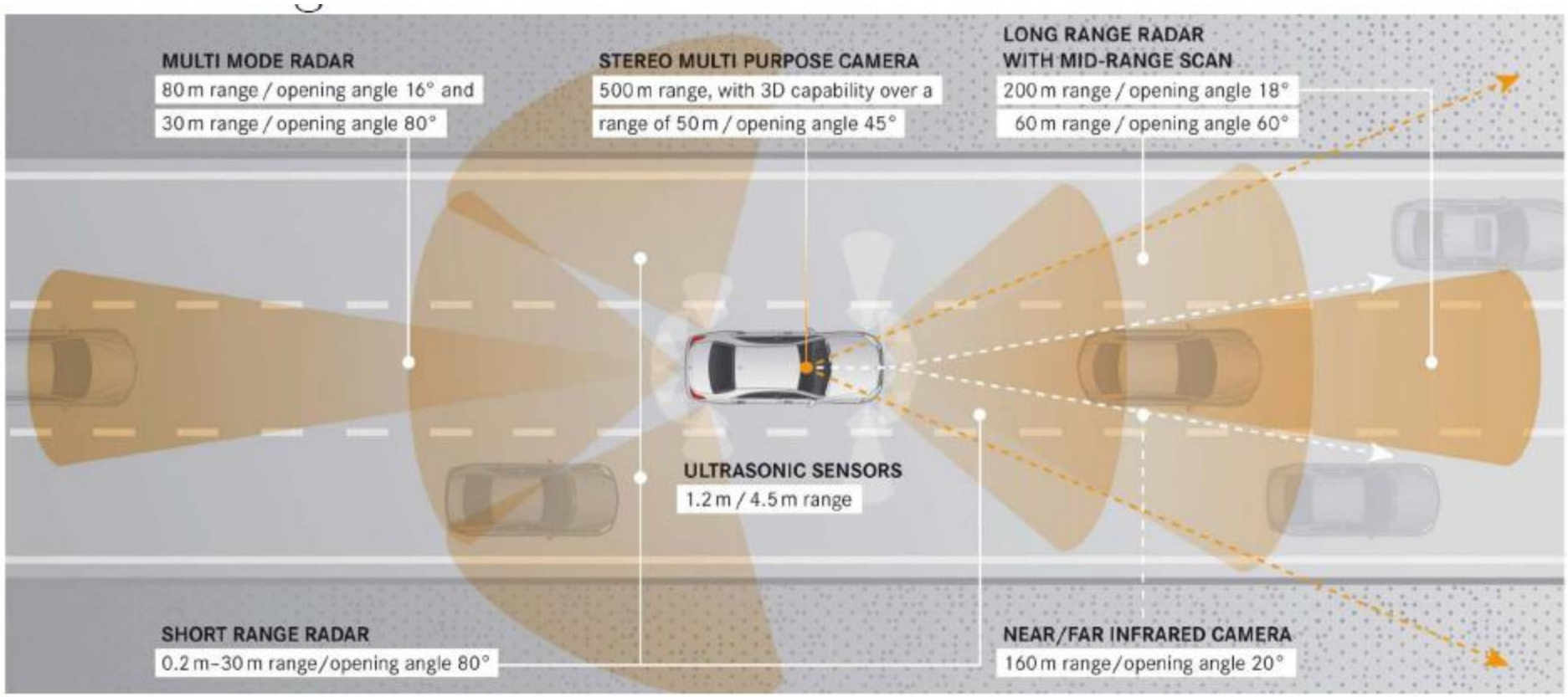

Source: Gottscholl, VDI/GMA Techn. C ommittee Meeting 7.62 A UTOREG, 2015

Sensor data fusion for assisted and automated driving

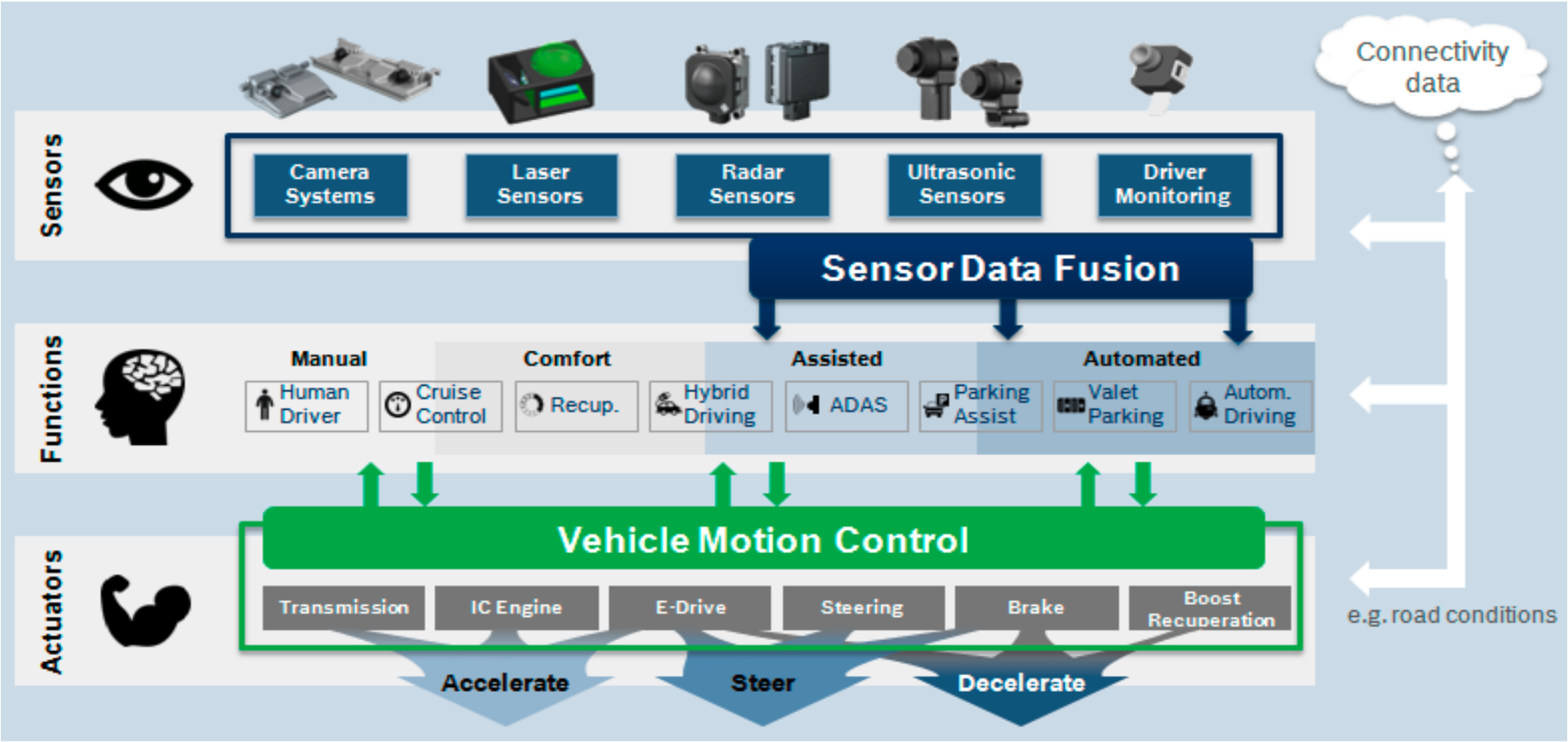

Source: Alexander Haeussler; Bosch; Automated Driving …, ATZ Conf. ChassisTec ,Munic h 2015

Highly precise position requirements

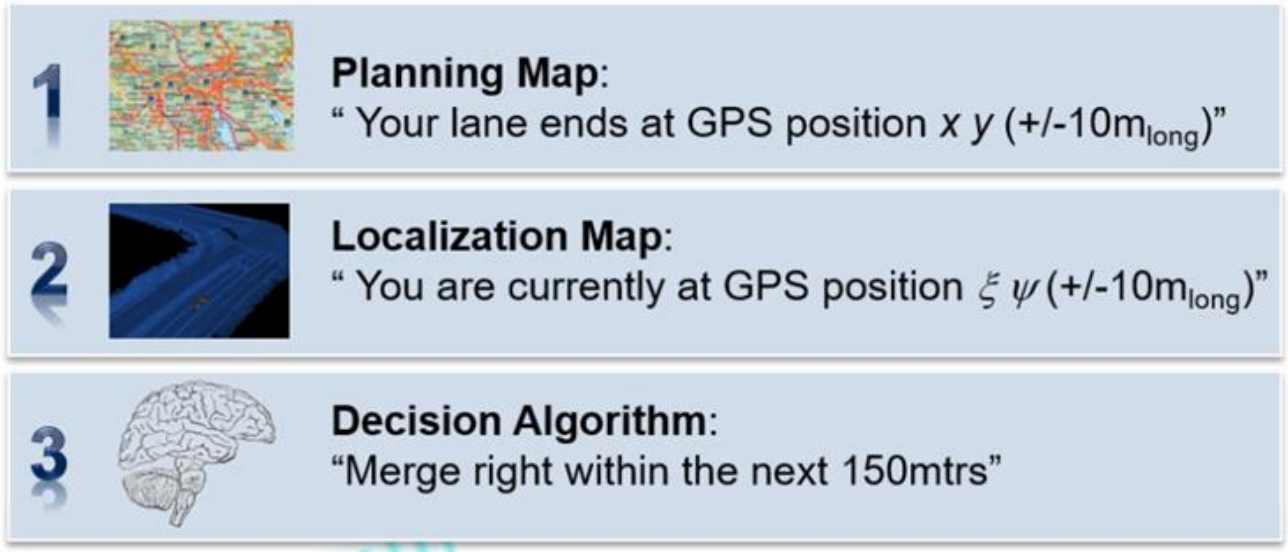

→ Precise, up-to-date maps with high resolution obtained by GPS and link to cloud data

Source: Gerhard Steiger: Bosch, ATZ-Conf. Driver Assist. Syst.,Frankfurt, 13/14 Apr. 2016

Security for cyber attacks: anomaly detection

- Information exchange via the cloud is expected for
  - navigation
  - teleservice (remote diagnosis)
  - Infotainment connections (internet, smart phones, …)
- Automotive control domain must be protected against external attacks
- Security measures have to be implemented (like known from IT-world), see Ihle, M. Glas, B., Bosch/ETAS (2016):
  - Layer 4: protect the vehicle as a node in a global network (firewalls)
  - Layer 3: protection of the internal E/E communication architecture (e.g. via the central gateway, connecting several bus systems)
  - Layer 2: security of vehicle internal communication (e.g. by new cryptographic protection)
  - Layer 1: protection of the individual ECU (preventing the misuse of functions, e.g. by building blocks, keys, special hardware security mdules)
- Present access points: OBD plug, bluetooth, keyless entry

4 layer security levels

RB Vehicle Security Approach – 4 Layers

Layer 3:
E/E Architecture

- Protect and separate **domains by E/E architecures** and **gateways**

Layer 1:
Individual ECU

- Protect **integrity of ECU SW & data**
- **Hardware Security Module**

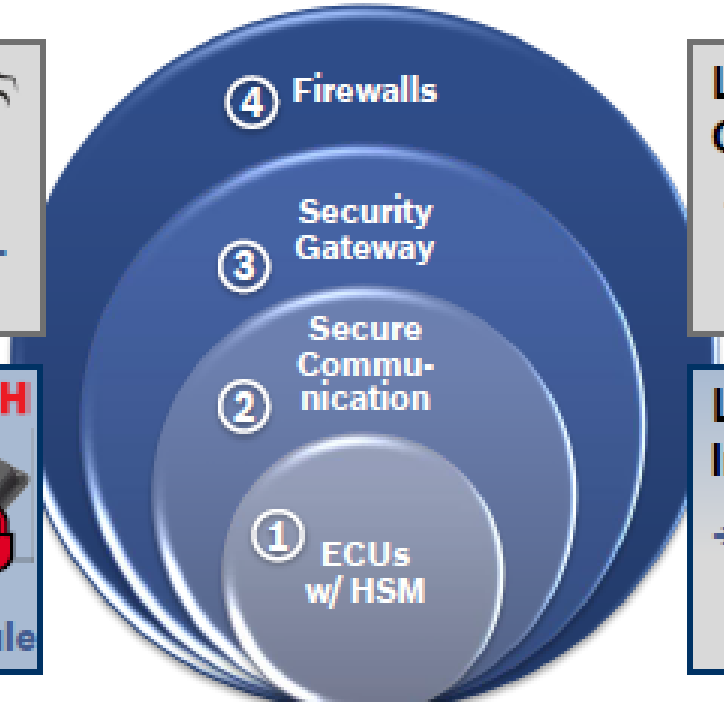

Layer 4:
Connected vehicle

- **Vehicle firewalls** and **security standards** for external interfaces

Layer 2:
In-vehicle network

- Protect **integrity of critical in-vehicle signals**

Source: Markus Ihle; Bosch Center of Competence Security, ATZ Conf. Diver Assist. Syst., Frankfurt, April 2016

Automotive Control Systems

- Introduction
- Mechatronic components and driver assistance systems
- Control strucures for automobiles
- Modelling and parameter estimation of vehicle dynamics
- From driver assistance systems to automatic driving
- Collision avoidance systems
- Fault tolerant issues
- Outlook

Collision avoidance systems: research projects at TU Darmstadt

- Accident type: in longitudinal direction

Vehicles move same direction

Other Vehicles:

- move ahead
- stop

Other Vehicles:

- move laterally
- cutting in
- crossing

Vehicles move opposite direction

Overtaking:

- rural road
- 2 lanes

→ oncoming vehicle

Overtaking:

- autobahn
- ≥ 2 lanes

→ oncoming vehicle, wrong way

Straight driving:

- own vehicle turns to left
- other vehicle turns to left

- CAV actions:

- warning
- braking
- swerving to free lane

- warning
- braking and
- swerving back

- warning
- braking and
- swerving to the right

- warning
- braking & swerving: to the right to free lane

PRORETA 1 (2003 – 2006)

PRORETA 2 (2006 – 2009)

Driver assistance system for obstacle collision avoidance (PRORETA 1: 2003-2006)

R. Isermann, R. Bruder, H. Winner
E. Bender, M. Darms, M. Schorn, U. Stählin

PRORETA

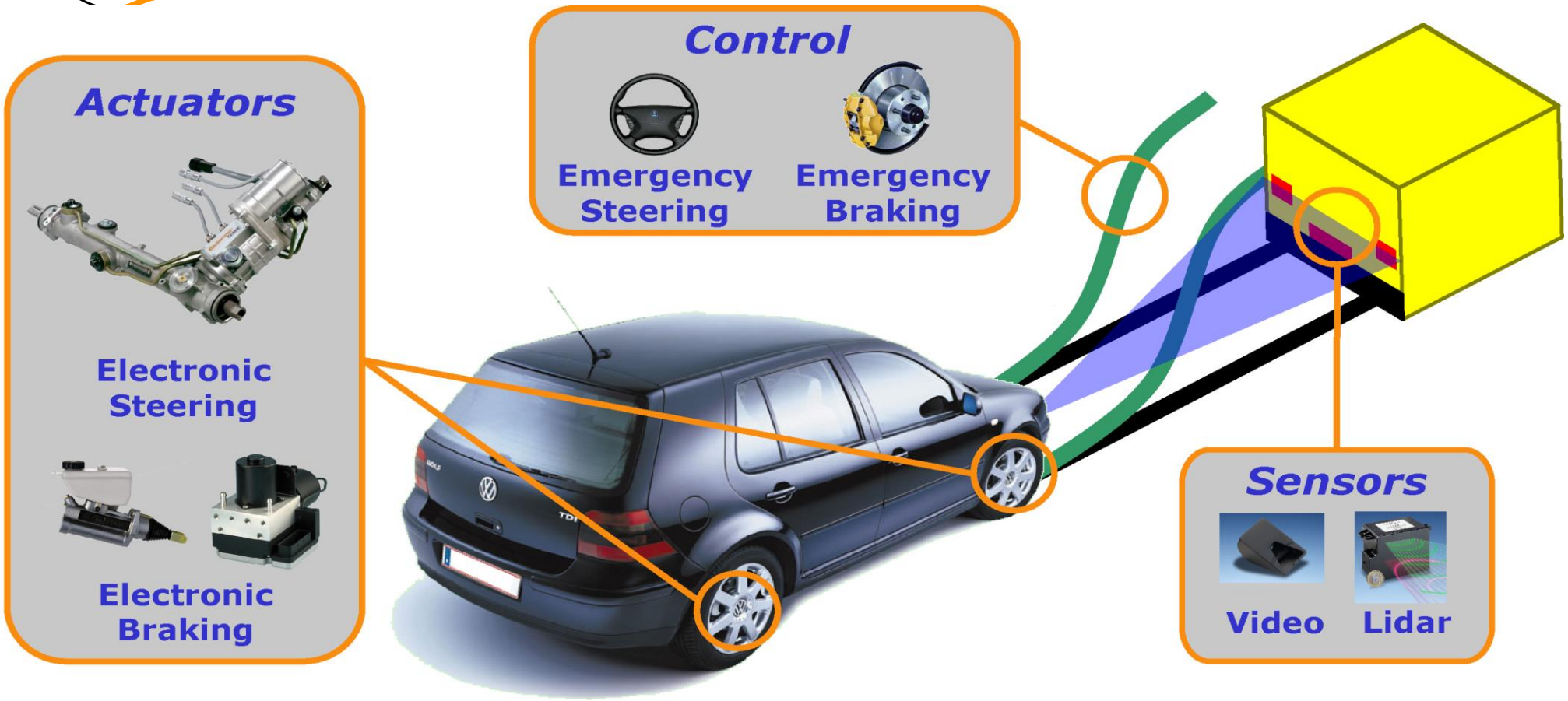

In Cooperation with Continental

Considered collision cases: obstacle in lane

→ Automatic intervention in the last possible instant

a) Blocked lane

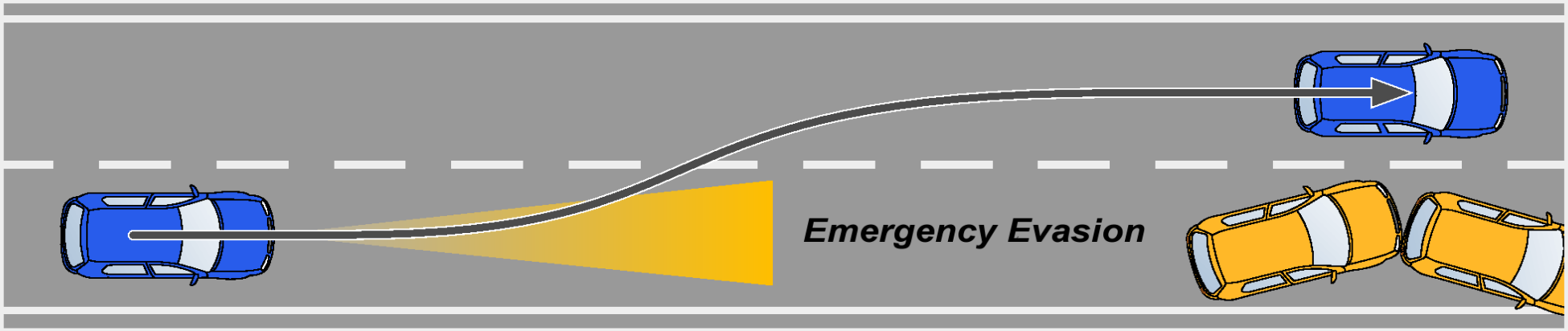

b) Cutting-in vehicle

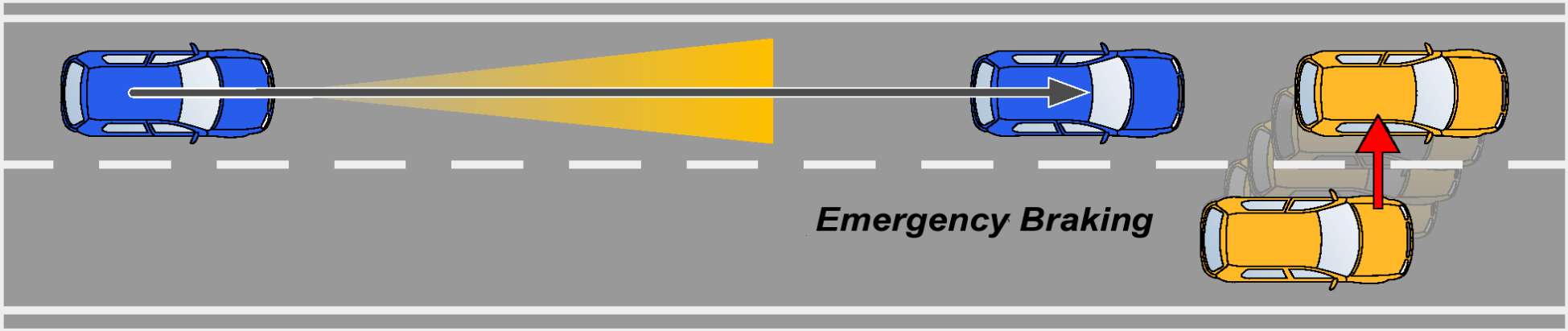

Testing and system validation

- Emergency steering (driver keeps steering wheel straight)

Driver assistance system for collision avoidance during overtaking maneuvers , PRORETA 2 (2006-2009)

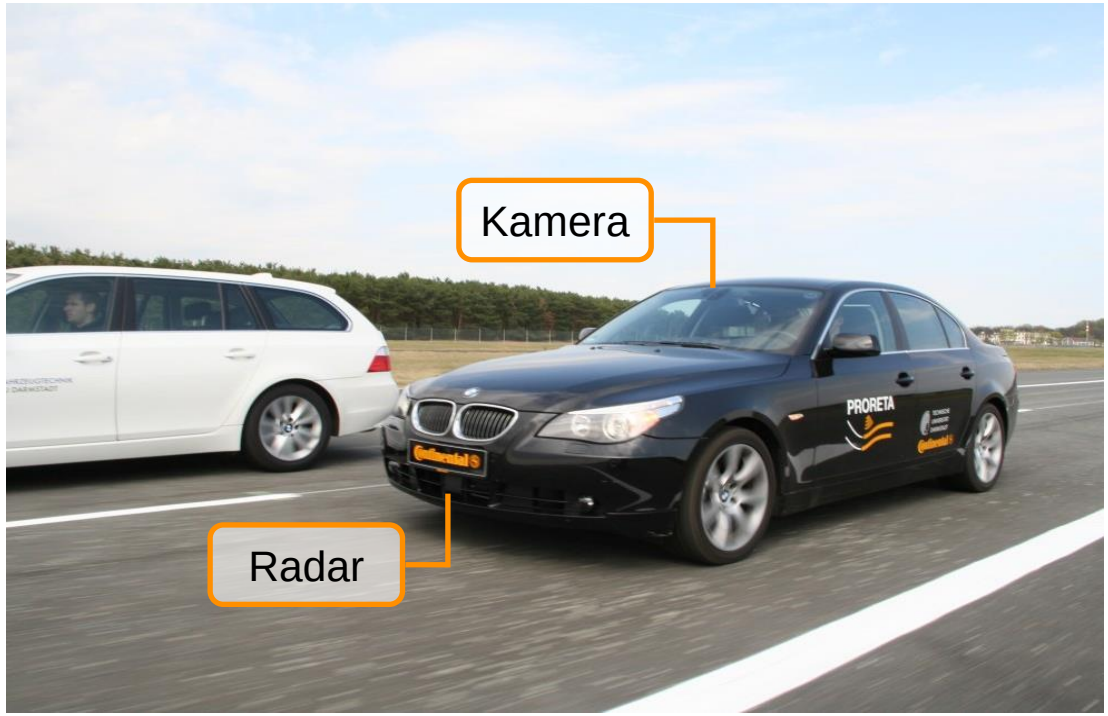

BMW 540 i

- Used environmental sensors:
  - RADAR-System: Continental ARS 300, wide range, 77 GHz
  - Video-System: Continental CSF 200, mono, resolution 752 x 480 pixels

3. Situation analysis

1. Odometry: Position on road
2. Maneuver detection: detection of an overtaking maneuver
3. Hazard evaluation: detection of hazards during overtaking

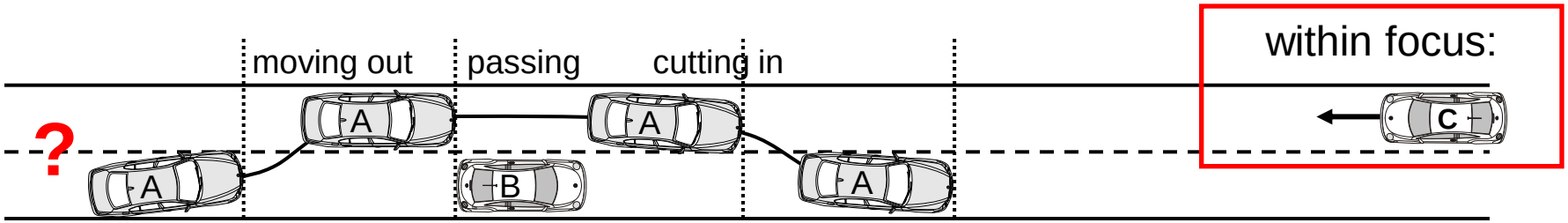

- Input data:
  - Drive dynamic sensors
  - Camera based lane detection
  - Object-tracking based on radar and camera

4. Warnings and automatic actions

- planning of overtaking break-off -

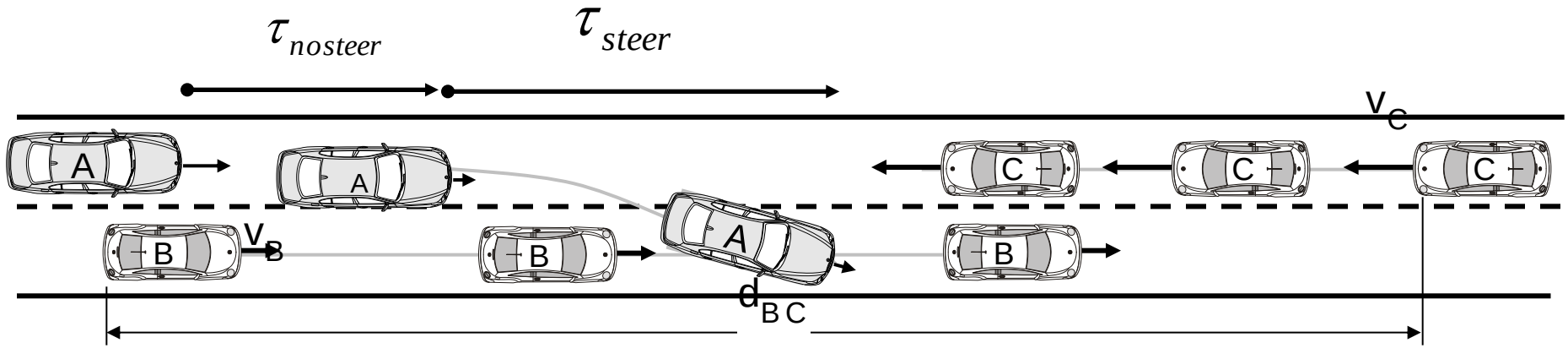

Required time
for cutting in

$$\tau_{required} = \tau_{steer} + \tau_{nosteer}$$

Available time
for cutting in

$$\tau_{\mathrm{avail}} = TTC_{\mathrm{BC}} = \frac{d_{\mathrm{BC}}}{v_{\mathrm{B}} + v_{\mathrm{C}}}$$

break-off of overtaking, if:

required time $\tau_{required} \geq$ available time $\tau_{available}$

→ **1. Warnings**: driver brakes: ok
→ **2. Automatic Braking**: if the driver does not brake
→ **3. Cutting in:** by the driver

Overtaking assistant: PRORETA 2

Overtaking maneuver: warning and automatic braking

Available collision avoiding systems

- **Automatic emergency braking (AEB):**
  - for in front driving or stopping vehicles:
    - forward collision warning
    - activation of brake system
    - automatic full braking
  - for crossing vehicles
  - for pedestrians
- **Automatic evasion**
  - Evasive steering assist (MB)
  - In development, depends on surrounding information
- **Overtaking assistance:**
  - ?

Automotive Control Systems

- Introduction
- Mechatronic components and driver assistance systems
- Control structures for automobiles
- Modelling and parameter estimation of vehicle dynamics
- From driver assistance systems to automatic driving
- Collision avoidance systems
- Fault tolerant issues
- Outlook

Conventional vs. automatic driving

- **Conventional driving:** driver is always in a control loop for driving
  - Controls the vehicle along a route
  - Supervises the right functioning of the vehicle
  - Obtains warnings for specified faults of some components
  - Takes apropriate actions in the case of faults

- **Highly automatic driving:** driver is temporarily not in a control loop
  - Electronic automatic closed loop control systems drive the car
  - This is based on sensor signals, digital control algorithms, electrical commanded actuators
  - Appearing faults in sensors and actuators influence immediately the closed loop behavior
    - Small faults may be compensated by the closed loop for some time
    - Larger faults may result in control deviations, sluggish behavior, instable behavior (monotonic or oscillatory)

→ **safety critical components** (sensors, communication channels, electrical board net, actuators)

need a fault tolerant design

Different kinds of redundancy

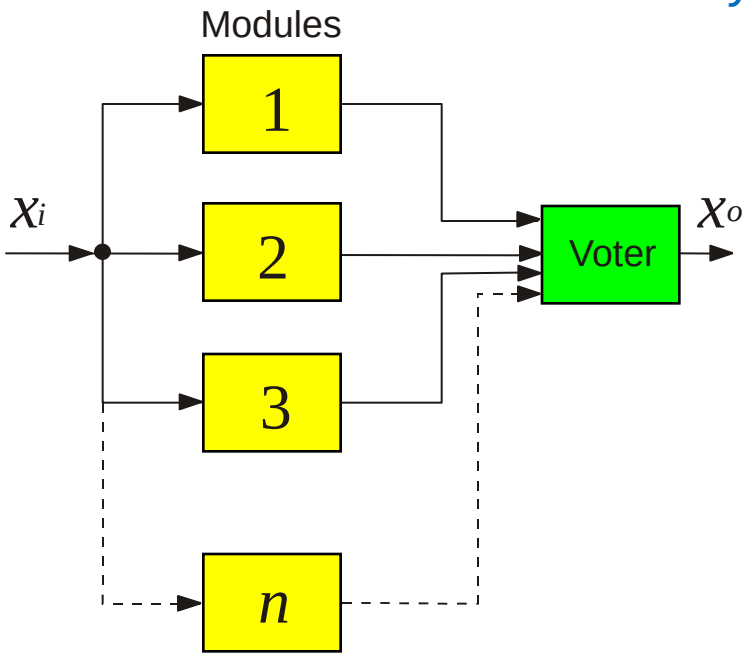

a) **Static redundancy**:
n-out-of m voting
$n = 3$; 1 fault tolerated
$n = 5$; 2 faults tolerated

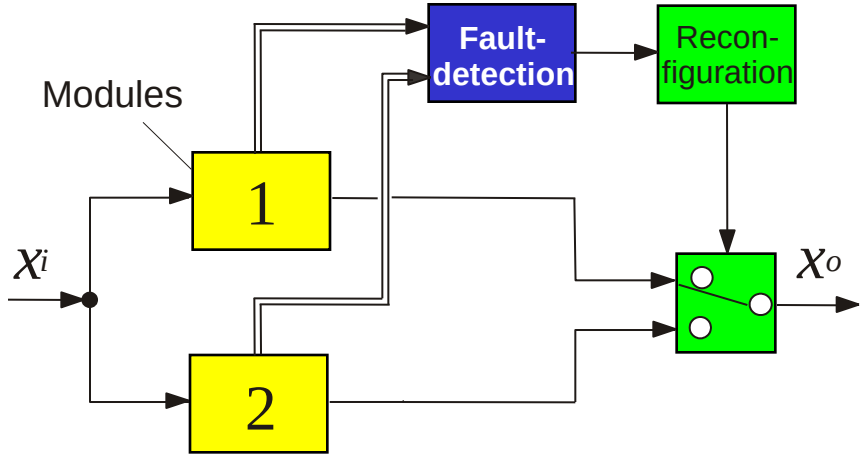

b) **Dynamic redundancy: hot standby**
(small transfer time) $n = 2$; 1 fault tolerated

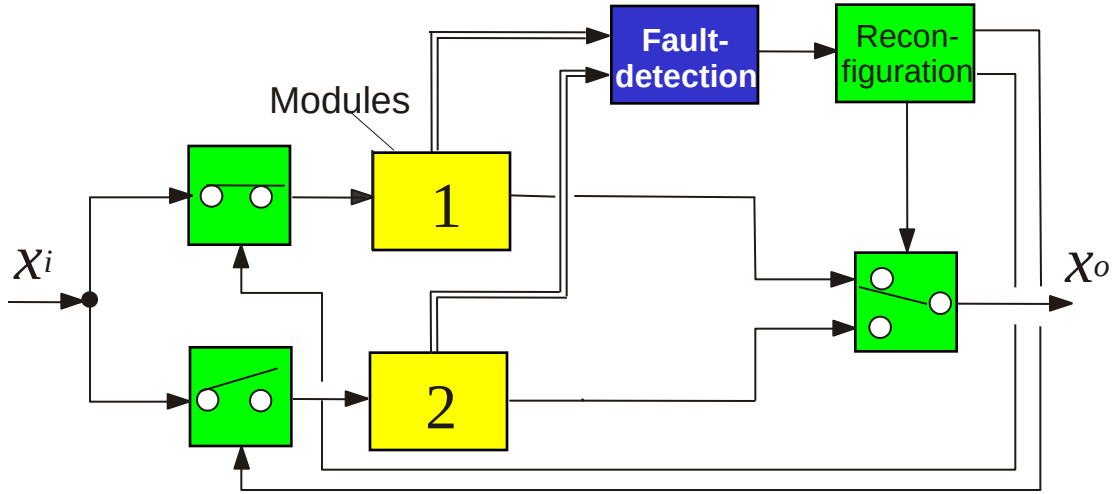

c) **Dynamic redundancy: cold standby**
(larger transfer time) $n = 2$; 1 fault tolerated

Degradation steps of fault-tolerant systems

Fail Operational (FO)

- System remains **operational** (after 1 failure)
- Possible, if the component has **analytical** or **hardware** redundancy
- In the case of a fault, the system switches from a defect component to an intact one ➔ system reconfiguration

Fail Silent (FSIL)

- Component is switched off in case of fault
- With regard to other components, the faulty components is **silent**, i.e. other components are not affected by the faulty component

Fail Safe (FS)

- Component is brought to **safe state** and is switched off
- Differentiation: active and passive fail-safe
- Operation cannot be maintained in case of a fault

Fail (F)

- Permanent interruption of operation

Required fault tolerant chassis components

- Brake system
  - Electromechanic booster→ redundance by ESC
  - Hydraulic brake circuits → redundance by 2 brake circuits
  - Electromagnetic valves
  - Brake system sensors (positions, currents, pressure, wheel speeds: (4 wheels)
  - ECU software functions (ABS, ESC)
- Power steering system (EPS)
  - Electromotor
  - Steering gear (pinion-rack, ball-recirculation …)
  - Steering system sensors (steering angle (redundant), torque, …)
  - EPS-ECU software functions
- Chassis sensors
  - Acceleration (lateral, longitud.)
  - Yaw rate
  - Longitudinal speed
- Electric power supply:
  - Generation and batteries

→ redundancy is presently only partially implemented ,

→ **general hardware redundancy or analytical redundancy has to be developed**

Electrical Power Steering System (Example)

Motor+ECU

Technical Data
Interface: CAN
Current demand: ≤ 80 A
Speed: ± 8000 rpm
Torque: ± 6 Nm
Electrical Power: ≤ 960 W

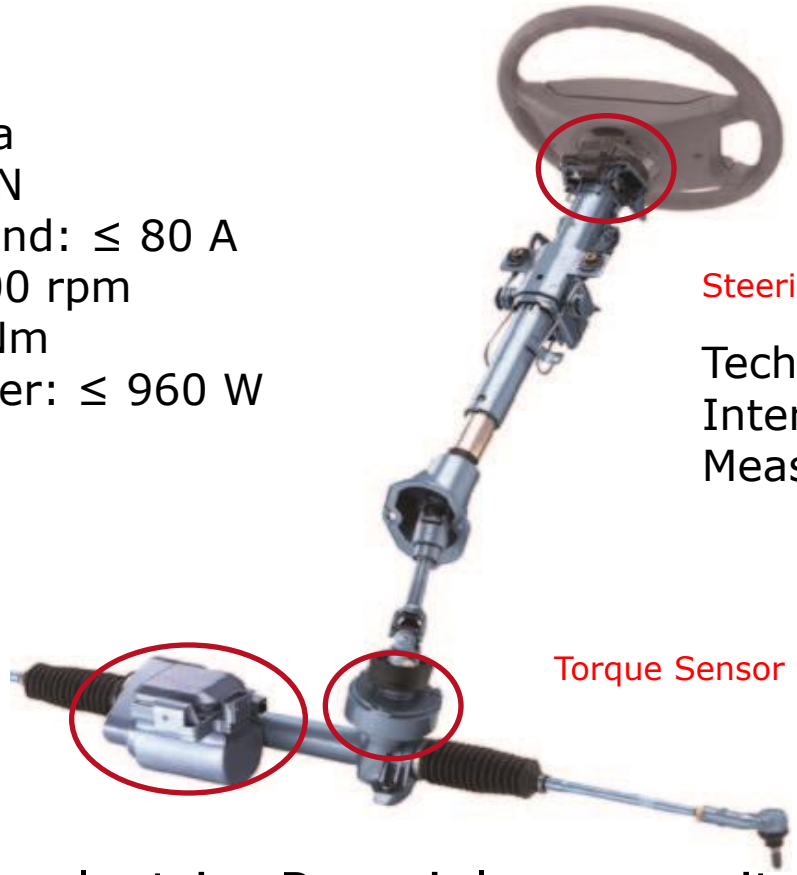

Steering wheel angle sensor (redundant, FO-F)

Technical Data
Interface: CAN
Measuring range: 1560 °

Torque Sensor

ZF Servolectric: Paraxial servo unit

Source: ZF Lenksysteme

Fault-tolerant structures for EPS systems with increasing redundancy

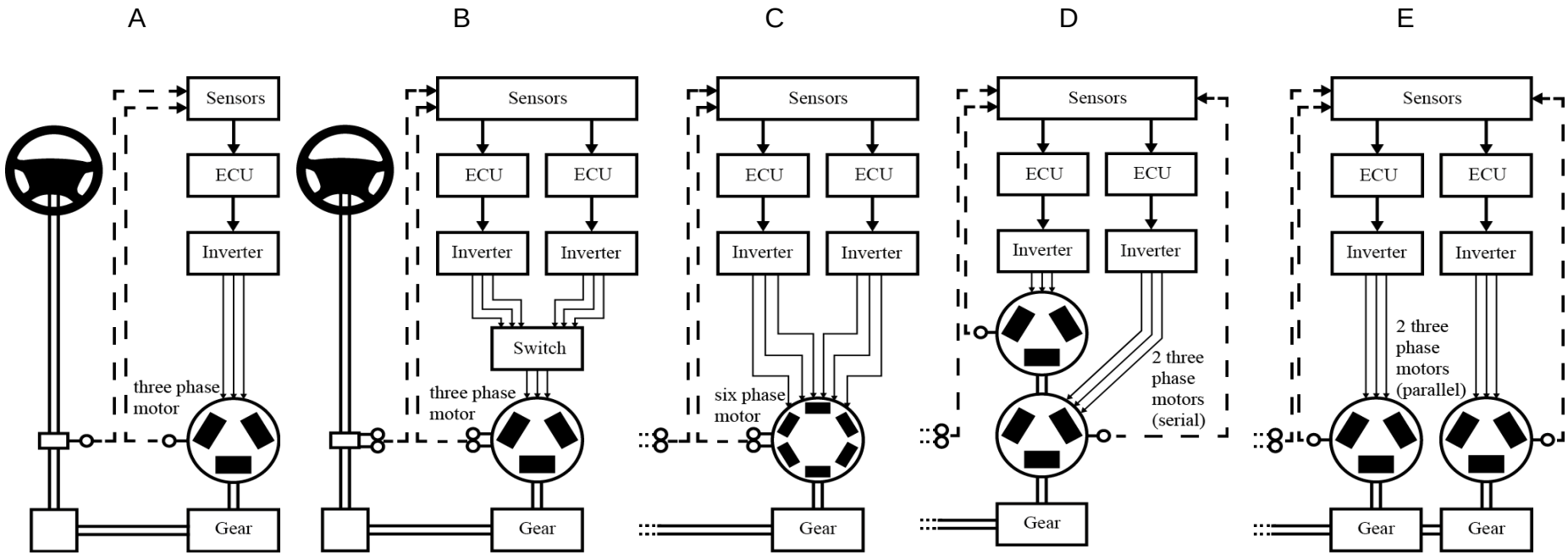

faults	redundancy
Sensors	-
ECU	-
Inverter	-
Motor	-
Gear	-

Test bench for a duplex EPS (case E) at IAT, TU Darmstadt

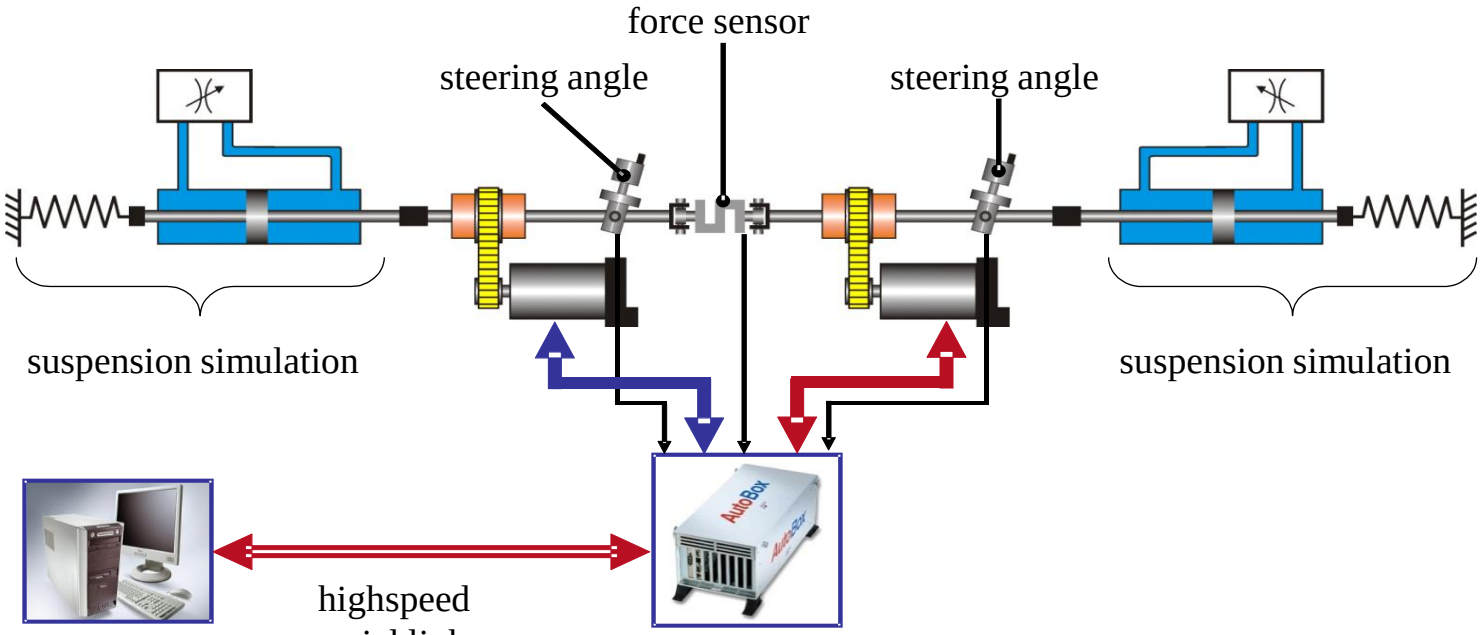

a)

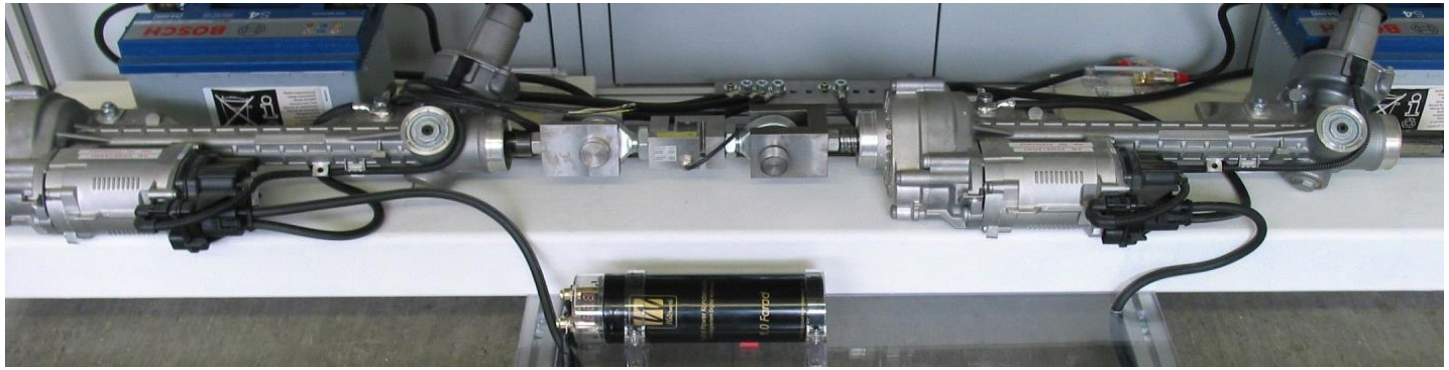

b)

Conclusions and Outlook

- **Mechatronic components , electrification and surrounding sensor systems** are the basis for advanced driver assistance systems and automatic driving
- The **introduction of (partial) automatic driving** occurs step by step, taking into account reliability, safety and (current) liability
- **Virtual development** is required and includes :
  - Mathematical models (components, vehicle) with different degrees of granularity (research, suppliers, OEMs)
  - Development platforms with SiL, MiL and HiL-Simulation
  - Hardware and software prototypes
- **Testing and validation:** virtual by simulation and by experiments on testing grounds and with real traffic scenarios
- **Electronic architecture changes**: real time buses (Flexray, Ethernet), more integrated control → centralized hierarchical control
- **Safety issues:** fault-tolerance with redundancy, cyber-security
- Similar developments for model and computer based **control of powertrains** (combustion engines, hybrid and electric drives and transmissions)